SUGO

TERMINAL BLOCK CATALOGUE 2016 / 2017

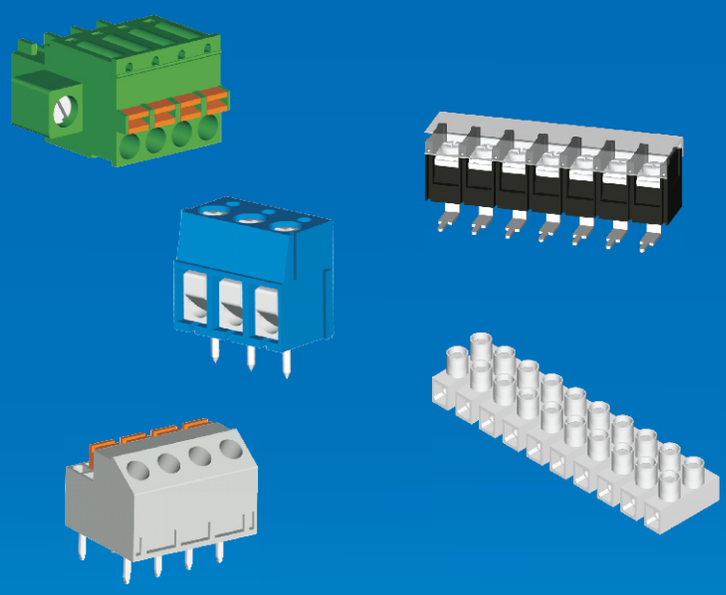

- PCB Terminal Blocks
- Pluggable Terminal Blocks
- Screwless Terminal Blocks
- Eurostyle Terminal Blocks
- Barrier Terminal Blocks

SUGO INDUSTRIAL COMPANY LIMITED

SUGO

PLUGGABLE TERMINAL BLOCKS

15ESGK

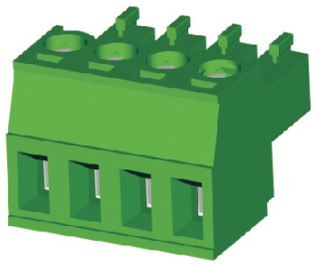

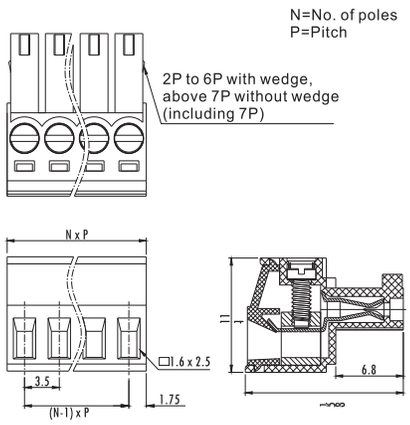

Unit: mm

SPECIFICATION

Electrical:

Rated Voltage	300V
Rated Current	8A

Mechanical:

Torque	0.2Nm(1.7Lb-In.)
operating Temp.	-40°C ~ 105°C
Striping length	7mm

Dimensions:

Wire range	28-16AWG
Pitch	3.5mm(.138”) 3.81mm(.150”)
Poles	2P - 24P

Material:

Housing	PA66,UL94V-0
Screw	M2,Steel Cr^{3+}Zn Plated
Contact	Phosphor Bronze
Cage	Brass, Ni Plated

15ESGKM

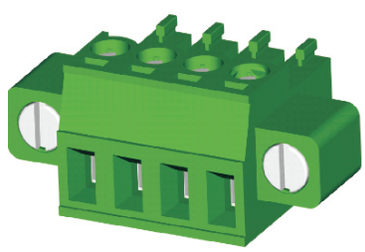

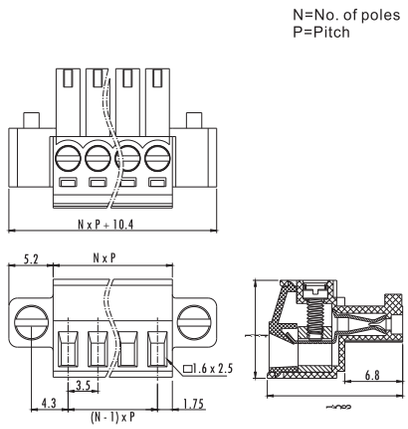

Unit: mm

SPECIFICATION

Electrical:

Rated Voltage	300V
Rated Current	8A

Mechanical:

Torque	0.2Nm(1.7Lb-In.)
operating Temp.	-40°C ~ 105°C
Striping length	7mm

Dimensions:

Wire range	28-16AWG
Pitch	3.5mm(.138”) 3.81mm(.150”)
Poles	2P - 20P

Material:

Housing	PA66,UL94V-0
Screw	M2,Steel, Cr^{3+}Zn Plated
Contact	Phosphor Bronze
Cage	Brass, Ni Plated

15ESGKA

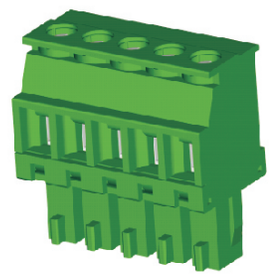

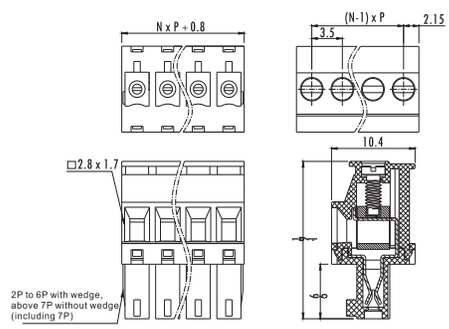

Unit: mm

SPECIFICATION

Electrical:

Rated Voltage	300V
Rated Current	8A

Mechanical:

Torque	0.2Nm(1.7Lb-In.)
operating Temp.	-40°C ~ 105°C
Striping length	7mm

Dimensions:

Wire range	28-16AWG
Pitch	3.5mm(.138”) 3.81mm(.150”)
Poles	2P - 24P

Material:

Housing	PA66,UL94V-0
Screw	M2,Steel, Cr^{3+}Zn Plated
Contact	Phosphor Bronze
Cage	Brass, Ni Plated

Sugo Industrial Company Limited - Email sales@sugo.com.hk / Tel. (852) 2790 1280 Fax. (852) 2304 8488 / www.sugo.com.hk
Sugo International Pty. Limited - Email sales@sugo-au.com / Tel. (61) 02 8385 0076 / www.sugo-au.com

SUGO

PLUGGABLE TERMINAL BLOCKS

15ESGKAM

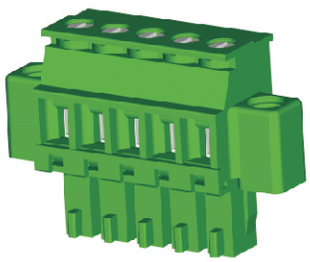

N=No. of poles
P=Pitch

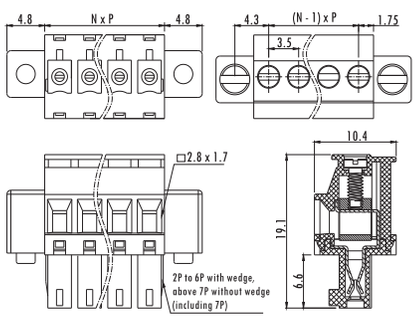

Unit: mm

SPECIFICATION

Electrical:

Rated Voltage	300V
Rated Current	8A

Mechanical:

Torque	0.2Nm(1.7Lb-In.)
operating Temp.	-30°C ~ 120°C
Striping length	7mm

Dimensions:

Wire range	28-16AWG
Pitch	3.5mm(.138”) 3.81mm(.150”)
Poles	2P - 20P

Material:

Housing	PBT, UL94V-0
Screw	M2,Steel Cr^{3+}Zn Plated
Contact	Phosphor Bronze
Cage	Brass, Ni Plated

15ESGKB

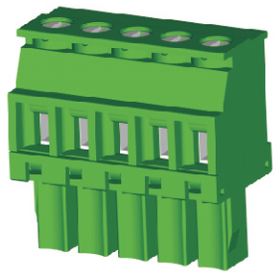

N=No. of poles
P=Pitch

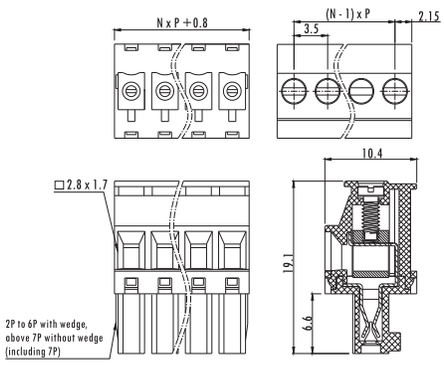

Unit: mm

SPECIFICATION

Electrical:

Rated Voltage	300V
Rated Current	8A

Mechanical:

Torque	0.2Nm(1.7Lb-In.)
operating Temp.	-30°C ~ 120°C
Striping length	7mm

Dimensions:

Wire range	28-16AWG
Pitch	3.5mm(.138”) 3.81mm(.150”)
Poles	2P - 20P

Material:

Housing	PBT, UL94V-0
Screw	M2,Steel, Cr^{3+}Zn Plated
Contact	Phosphor Bronze
Cage	Brass, Ni Plated

15ESGKBM

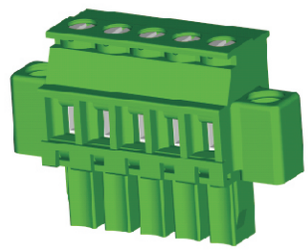

N=No. of poles
P=Pitch

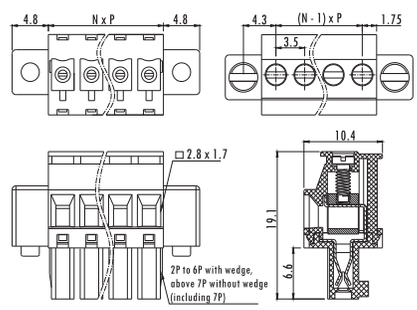

Unit: mm

SPECIFICATION

Electrical:

Rated Voltage	300V
Rated Current	8A

Mechanical:

Torque	0.2Nm(1.7Lb-In.)
operating Temp.	-30°C ~ 120°C
Striping length	7mm

Dimensions:

Wire range	28-16AWG
Pitch	3.5mm(.138”) 3.81mm(.150”)
Poles	2 - 20P

Material:

Housing	PBT, UL94V-0
Screw	M2,Steel, Cr^{3+}Zn Plated
Contact	Phosphor Bronze
Cage	Brass, Ni Plated

Sugo Industrial Company Limited - Email sales@sugo.com.hk / Tel. (852) 2790 1280 Fax. (852) 2304 8488 / www.sugo.com.hk
Sugo International Pty. Limited - Email sales@sugo-au.com / Tel. (61) 02 8385 0076 / www.sugo-au.com

SUGO

PLUGGABLE TERMINAL BLOCKS

15ESGVC

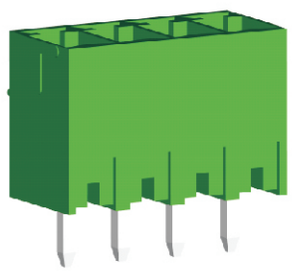

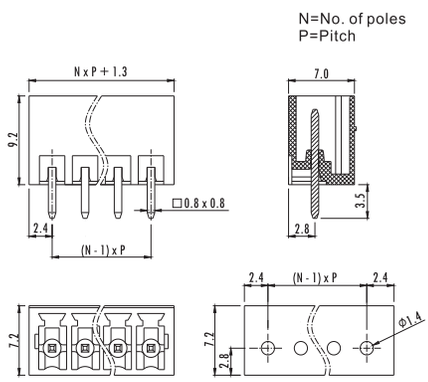

Unit: mm

SPECIFICATION

Electrical:

Rated Voltage	300V
Rated Current	8A

Mechanical:

operating Temp.	-40°C ~ 105°C

Dimensions:

Pitch	3.5mm(.138”) 3.81mm(.150”)
Poles	2P - 24P

Material:

Housing	PA66,UL94V-0
Contact	Brass, Tin Plated

15ESGVM

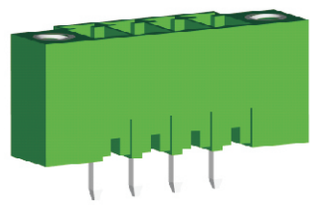

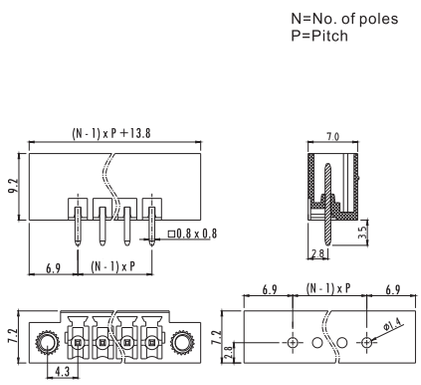

Unit: mm

SPECIFICATION

Electrical:

Rated Voltage	300V
Rated Current	8A

Mechanical:

operating Temp.	-40°C ~ 105°C

Dimensions:

Pitch	3.5mm(.138”) 3.81mm(.150”)
Poles	2P - 24P

Material:

Housing	PA66,UL94V-0
Nut	M2.5 Brass
Contact	Brass, Tin Plated

15ESGRC

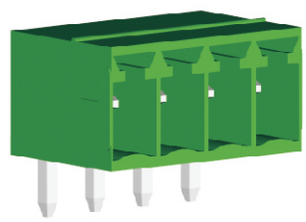

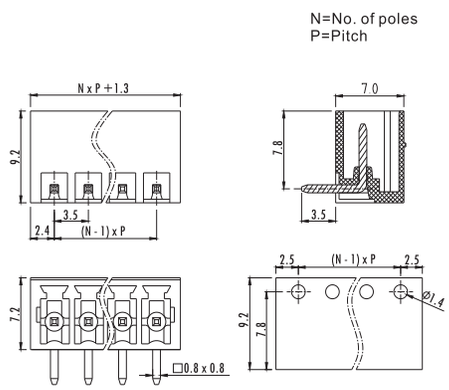

Unit: mm

SPECIFICATION

Electrical:

Rated Voltage	300V
Rated Current	8A

Mechanical:

operating Temp.	-40°C ~ 105°C

Dimensions:

Pitch	3.5mm(.138”) 3.81mm(.150”)
Poles	2P - 24P

Material:

Housing	PA66,UL94V-0
Contact	Brass, Tin Plated

Sugo Industrial Company Limited - Email sales@sugo.com.hk / Tel. (852) 2790 1280 Fax. (852) 2304 8488 / www.sugo.com.hk
Sugo International Pty. Limited - Email sales@sugo-au.com / Tel. (61) 02 8385 0076 / www.sugo-au.com

SUGO

PLUGGABLE TERMINAL BLOCKS

15ESGRM

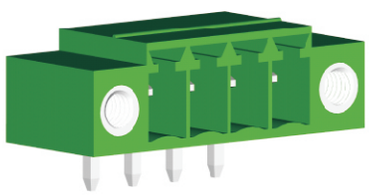

N=No. of poles
P=Pitch

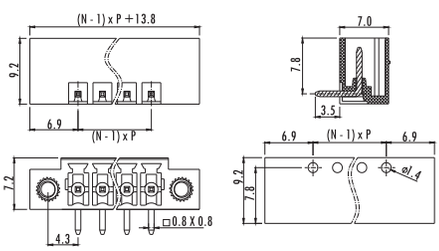

Unit: mm

SPECIFICATION

Electrical:

Rated Voltage	300V
Rated Current	8A

Mechanical:

operating Temp.	-40°C ~ 105°C

Dimensions:

Pitch	3.5mm(.138”) 3.81mm(.150”)
Poles	2P - 24P

Material:

Housing	PA66,UL94V-0
Nut	M2.5 Brass
Contact	Brass, Tin Plated

15ESGVH

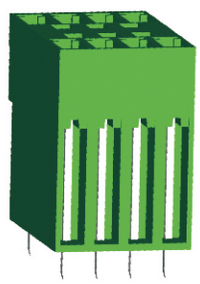

N=No. of poles
P=Pitch

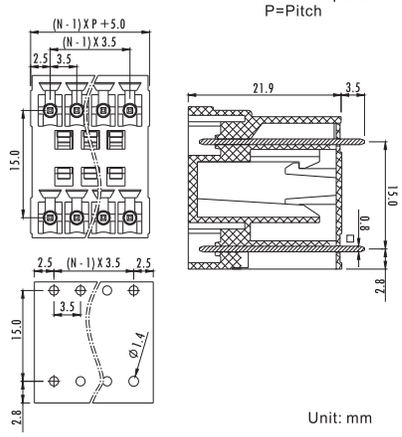

Unit: mm

SPECIFICATION

Electrical:

Rated Voltage	300V
Rated Current	8A

Mechanical:

operating Temp.	-40°C ~ 105°C

Dimensions:

Pitch	3.5mm(.138”) 3.81mm(.150”)
Poles	2P - 24P

Material:

Housing	PA66,UL94V-0
Contact	Brass, Tin Plated

15ESGVHM

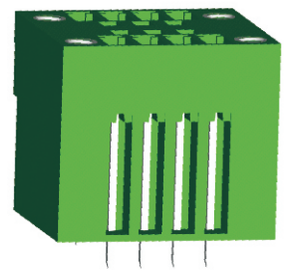

N=No. of poles
P=Pitch

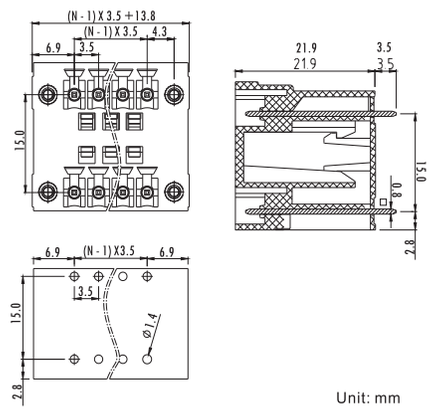

Unit: mm

SPECIFICATION

Electrical:

Rated Voltage	300V
Rated Current	8A

Mechanical:

operating Temp.	-40°C ~ 105°C

Dimensions:

Pitch	3.5mm(.138”) 3.81mm(.150”)
Poles	2P - 24P

Material:

Housing	PA66,UL94V-0
Nut	M2.5 Brass
Contact	Brass, Tin Plated

Sugo Industrial Company Limited - Email sales@sugo.com.hk / Tel. (852) 2790 1280 Fax. (852) 2304 8488 / www.sugo.com.hk
Sugo International Pty. Limited - Email sales@sugo-au.com / Tel. (61) 02 8385 0076 / www.sugo-au.com

SUGO

PLUGGABLE TERMINAL BLOCKS

15ESGRH

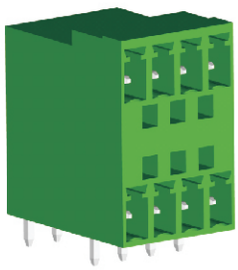

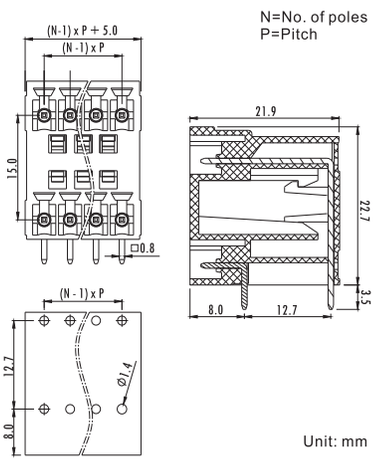

SPECIFICATION

Electrical:

Rated Voltage	300V
Rated Current	8A

Mechanical:

operating Temp.	-40°C ~ 105°C

Dimensions:

Pitch	3.5mm(.138”) 3.81mm(.150”)
Poles	2*2P - 24P

Material:

Housing	PA66,UL94V-0
Contact	Brass, Tin Plated

15ESGRHM

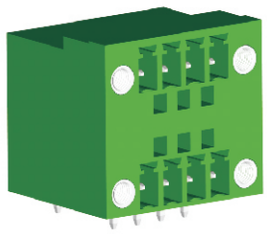

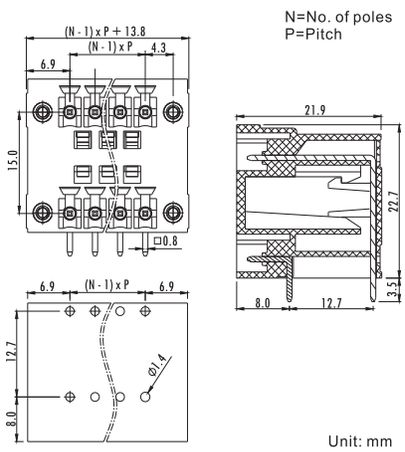

SPECIFICATION

Electrical:

Rated Voltage	300V
Rated Current	8A

Mechanical:

operating Temp.	-40°C ~ 105°C

Dimensions:

Pitch	3.5mm(.138”) 3.81mm(.150”)
Poles	2*2P - 24P

Material:

Housing	PA66,UL94V-0
Nut	M2.5 Brass
Contact	Brass, Tin Plated

15ESGKC

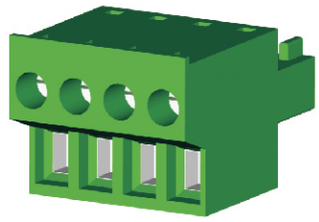

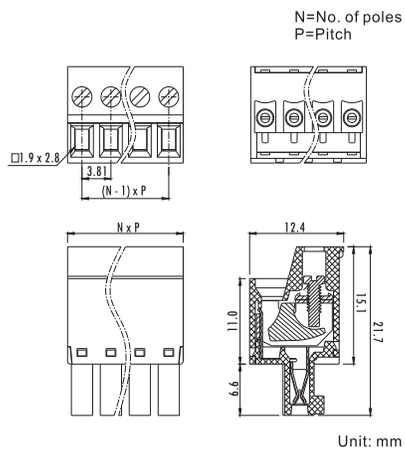

SPECIFICATION

Electrical:

Rated Voltage	300V
Rated Current	8A

Mechanical:

Torque	0.2Nm(1.7Lb-In.)
operating Temp.	-40°C ~ 105°C
Striping length	9mm

Dimensions:

Wire range	28-16AWG
Pitch	3.81mm(.150”)
Poles	2 - 24P

Material:

Housing	PBT, UL 94V-0
Screw	M2 Steel,
Contact	Phosphor Bronze
Cage	Steel, Zn Plated

Sugo Industrial Company Limited - Email sales@sugo.com.hk / Tel. (852) 2790 1280 Fax. (852) 2304 8488 / www.sugo.com.hk
Sugo International Pty. Limited - Email sales@sugo-au.com / Tel. (61) 02 8385 0076 / www.sugo-au.com

SUGO

PLUGGABLE TERMINAL BLOCKS

15ESGKCM

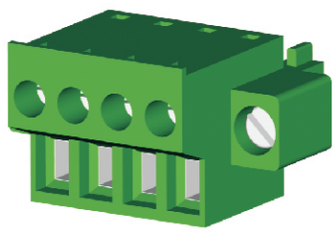

N=No. of poles
P=Pitch

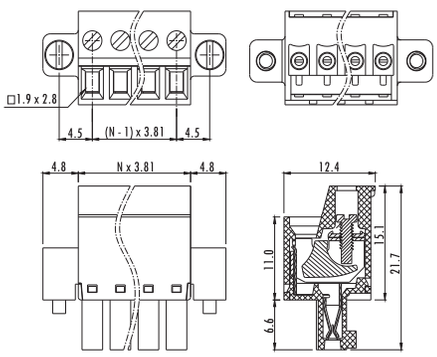

Unit: mm

SPECIFICATION

Electrical:

Rated Voltage	300V
Rated Current	8A

Mechanical:

Torque	0.2Nm(1.7Lb-In.)
operating Temp.	-40°C ~ 105°C
Striping length	9mm

Dimensions:

Wire range	28-16AWG
Pitch	3.81mm(.150")
Poles	2 - 20P

Material:

Housing	PBT, UL94V-0
Screw	M2 Steel, Cr^{3+}Zn Plated
Contact	Phosphor Bronze
Cage	Steel Cr^{3+}Zn Plated

15ESGKD

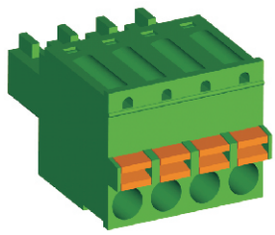

N=No. of poles
P=Pitch

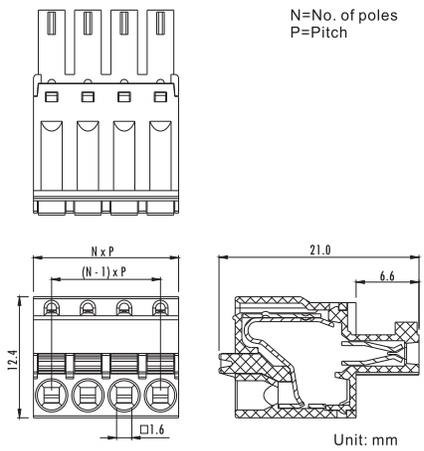

Unit: mm

SPECIFICATION

Electrical:

Rated Voltage	300V
Rated Current	8A

Mechanical:

operating Temp.	-40°C ~ 105°C
Striping length	9mm

Dimensions:

Wire range	28-16AWG
Pitch	3.5mm(.138") 3.81mm(.150")
Poles	2P - 24P

Material:

Housing	PA66, UL94V-0
Contact	Phosphor Bronze
Wire guard	Steel

15ESGKDM

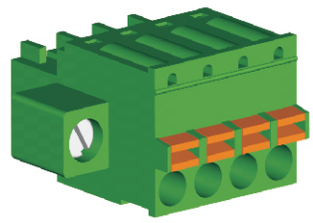

N=No. of poles
P=Pitch

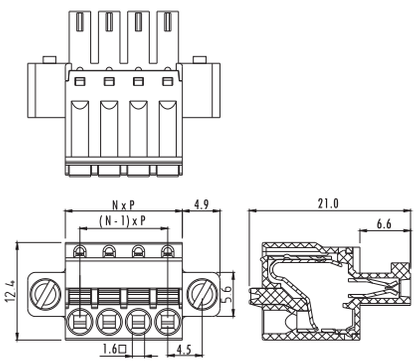

Unit: mm

SPECIFICATION

Electrical:

Rated Voltage	300V
Rated Current	8A

Mechanical:

operating Temp.	-40°C ~ 105°C
Striping length	9mm

Dimensions:

Wire range	28-16AWG
Pitch	3.5mm(.138") 3.81mm(.150")
Poles	2P - 20P

Material:

Housing	PA66, UL94V-0
Contact	Phosphor Bronze
Wire gaurd	Steel

Sugo Industrial Company Limited - Email sales@sugo.com.hk / Tel. (852) 2790 1280 Fax. (852) 2304 8488 / www.sugo.com.hk
Sugo International Pty. Limited - Email sales@sugo-au.com / Tel. (61) 02 8385 0076 / www.sugo-au.com

SUGO

PLUGGABLE TERMINAL BLOCKS

HTSG396K

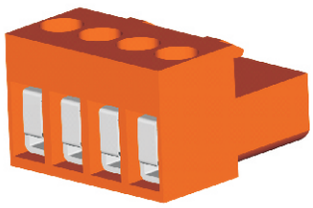

N=No. of poles
P=Pitch

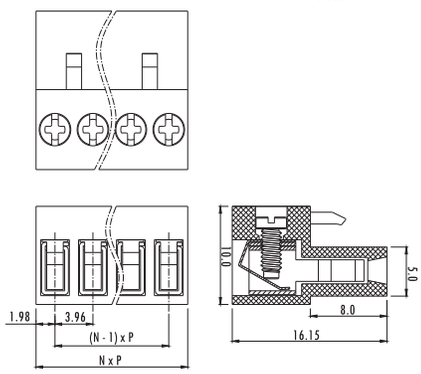

Unit: mm

SPECIFICATION

Electrical:

Rated Voltage	150V
Rated Current	8A

Mechanical:

Torque	0.2Nm(1.7Lb-In.)
Operating Temp.	-40°C ~ 105°C
Striping length	7mm

Dimensions:

Wire range	28-14AWG
Pitch	3.96mm(.156")
Poles	2P - 24P

Material:

Housing	PA66, UL94V-0
Screw	M2 Steel Ni Plated
Contact	Brass Tin Plated
Wire guard	Phosphor Bronze

HTSG396V

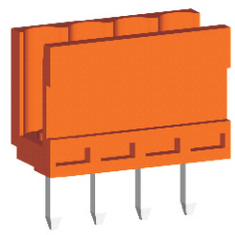

N=No. of poles
P=Pitch

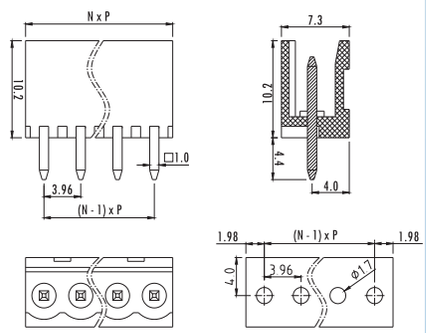

Unit: mm

SPECIFICATION

Electrical:

Rated Voltage	150V
Rated Current	8A

Mechanical:

operating Temp.	-40°C ~ 105°C

Dimensions:

Pitch	3.96mm(.156")
Poles	2P - 24P

Material:

Housing	PA66,UL94V-0
Contact	Brass Tin Plaed

HTSG396R

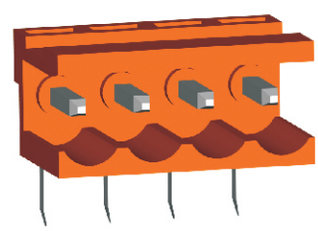

N=No. of poles
P=Pitch

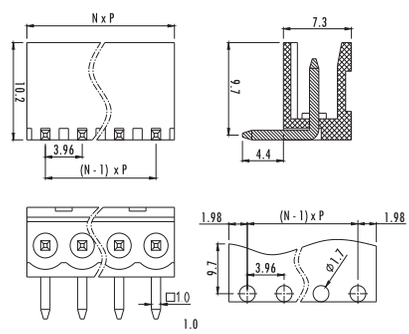

Unit: mm

SPECIFICATION

Electrical:

Rated Voltage	150V
Rated Current	8A

Mechanical:

operating Temp.	-40°C ~ 105°C

Dimensions:

Pitch	3.96mm(.156")
Poles	2P - 24P

Material:

Housing	PA66,UL94V-0
Contact	Brass Tin Plaed

Sugo Industrial Company Limited - Email sales@sugo.com.hk / Tel. (852) 2790 1280 Fax. (852) 2304 8488 / www.sugo.com.hk
Sugo International Pty. Limited - Email sales@sugo-au.com / Tel. (61) 02 8385 0076 / www.sugo-au.com

PLUGGABLE TERMINAL BLOCKS

SG332K

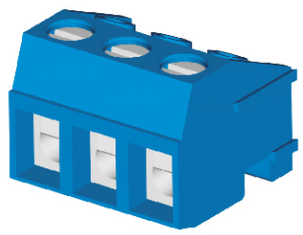

N=No. of poles
P=Pitch

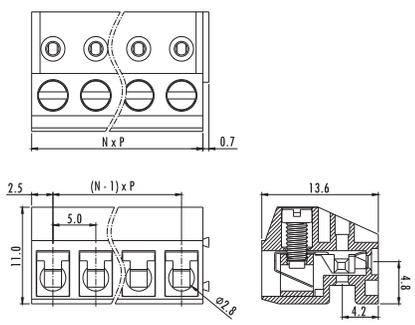

Unit: mm

SPECIFICATION

Electrical:

Rated Voltage	300V
Rated Current	10A

Mechanical:

Torque	0.4Nm(3.5Lb-In.)
operating Temp.	-30°C ~ 120°C
Striping length	5-6mm

Dimensions:

Wire range	28-16AWG
Pitch	5.0mm(.197")
Poles	2P,3P - 24P

Material:

Housing	PBT, UL94V-0
Screw	M2.5 Steel, Cr^{3+} Zn Plated
Contact	Phosphor Bronze
Cage	Brass, Ni Plated

SG332J

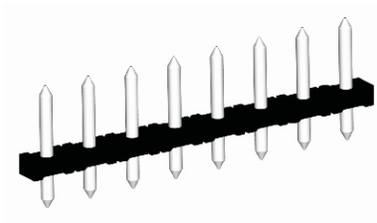

N=No. of poles
P=Pitch

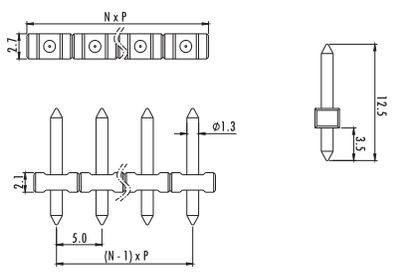

Unit: mm

SPECIFICATION

Electrical:

Rated Voltage	300V
Rated Current	10A

Mechanical:

operating Temp.	-40°C ~ 105°C

Dimensions:

Pitch	5.0mm(.197")
Poles	2P,3P - 24P

Material:

Housing	PA66+10%GF, UL94V-0
Contact	Brass Tin Plaed

15ESGKB

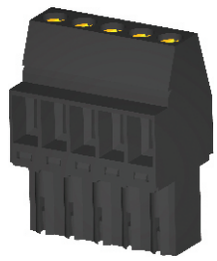

N=No. of poles
P=Pitch

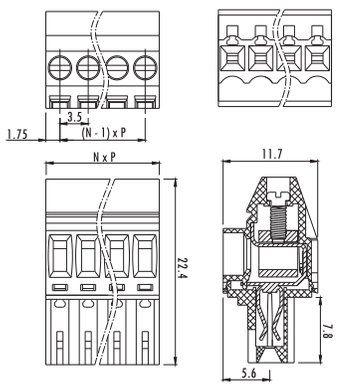

Unit: mm

SPECIFICATION

Electrical:

Rated Voltage	300V
Rated Current	8A

Mechanical:

Torque	0.2Nm(1.7Lb-In.)
operating Temp.	-30°C ~ 120°C
Striping length	7mm

Dimensions:

Wire range	28-16AWG
Pitch	3.5mm(.138")
Poles	2P - 20P

Material:

Housing	PBT, UL94V-0
Screw	M2,Steel Cr^{3+} Zn Plated
Contact	Phosphor Bronze
Cage	Brass, Ni Plated

Sugo Industrial Company Limited - Email sales@sugo.com.hk / Tel. (852) 2790 1280 Fax. (852) 2304 8488 / www.sugo.com.hk
Sugo International Pty. Limited - Email sales@sugo-au.com / Tel. (61) 02 8385 0076 / www.sugo-au.com

SUGO

PLUGGABLE TERMINAL BLOCKS

2ESGK

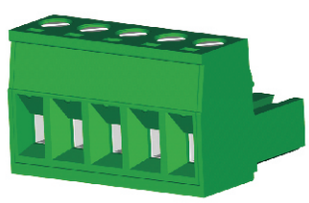

N=No. of poles
P=Pitch

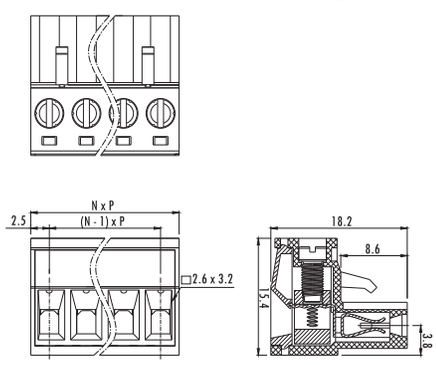

Unit: mm

SPECIFICATION

Electrical:

Rated Voltage	300V
Rated Current	15A

Mechanical:

Torque	0.4Nm(3.5Lb-In.)
Operating Temp.	-40°C ~ 105°C
Striping length	7mm

Dimensions:

Wire range	28-12AWG
Pitch	5.0mm(.197”) 5.08mm(.200”) 7.5mm(.295”) 7.62mm(.300”)
Poles	2P-24P / 2P-12P

Material:

Housing	PA66, UL94V-0
Screw	M3 Steel, Cr^{3+}Zn Plated
Contact	Phosphor Bronze
Cage	Brass, Ni Plated

2ESGKM

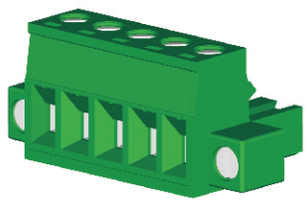

N=No. of poles
P=Pitch

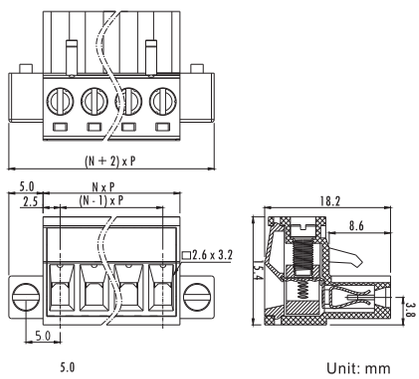

Unit: mm

SPECIFICATION

Electrical:

Rated Voltage	300V
Rated Current	15A

Mechanical:

Torque	0.4Nm(3.5Lb-In.)
Operating Temp.	-40°C ~ 105°C
Striping length	7mm

Dimensions:

Wire range	28-12AWG
Pitch	5.0mm(.197”) 5.08mm(.200”) 7.5mm(.295”) 7.62mm(.300”)
Poles	2P-24P / 2P-12P

Material:

Housing	PA66, UL94V-0
Screw	M2.5 Steel, Cr^{3+}Zn Plated
Contact	Phosphor Bronze
Cage	Brass, Ni Plated

2ESGKA

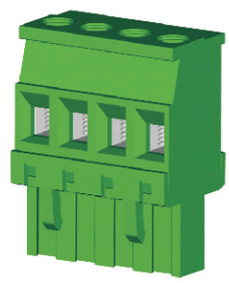

N=No. of poles
P=Pitch

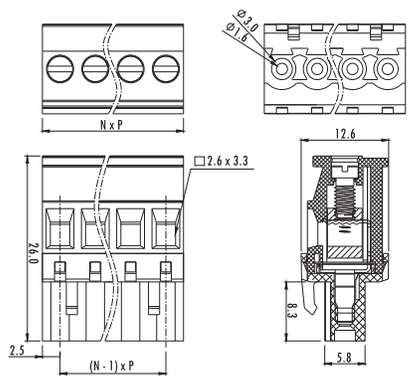

Unit: mm

SPECIFICATION

Electrical:

Rated Voltage	300V
Rated Current	15A

Mechanical:

Torque	0.4Nm(3.5Lb-In.)
Operating Temp.	-40°C ~ 105°C
Striping length	7mm

Dimensions:

Wire range	28-12AWG
Pitch	5.0mm(.197”) 5.08mm(.200”) 7.5mm(.295”) 7.62mm(.300”)
Poles	2P-24P / 2P-12P

Material:

Housing	PA66, UL94V-0
Screw	M2.5 Steel, Cr^{3+}Zn Plated
Contact	Phosphor Bronze
Cage	Brass, Ni Plated

Sugo Industrial Company Limited - Email sales@sugo.com.hk / Tel. (852) 2790 1280 Fax. (852) 2304 8488 / www.sugo.com.hk
Sugo International Pty. Limited - Email sales@sugo-au.com / Tel. (61) 02 8385 0076 / www.sugo-au.com

SUGO

PLUGGABLE TERMINAL BLOCKS

2ESGKAM

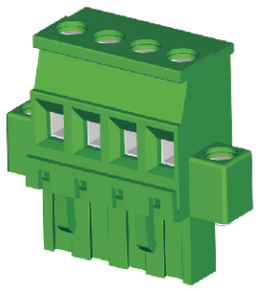

N=No. of poles
P=Pitch

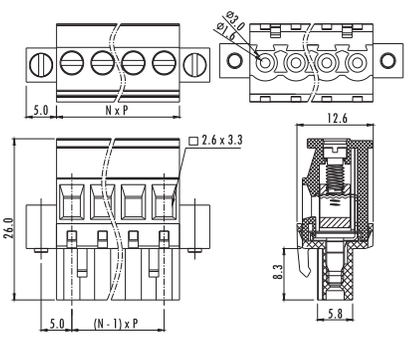

Unit: mm

SPECIFICATION

Electrical:

Rated Voltage	300V
Rated Current	15A

Mechanical:

Torque	0.4Nm(3.5Lb-In.)
operating Temp.	-40°C ~ 105°C
Striping length	7mm

Dimensions:

Wire range	28-12AWG
Pitch	5.0mm(.197”) 5.08mm(.200”) 7.5mm(.295”) 7.62mm(.300”)
Poles	2P - 22P/2P - 12P

Material:

Housing	PA66, UL94V-0
Screw	M2.5, Steel Cr^{3+}Zn Plated
Contact	Phosphor Bronze
Cage	Brass, Ni Plated

2ESGKB

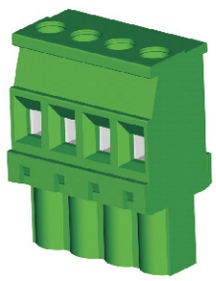

N=No. of poles
P=Pitch

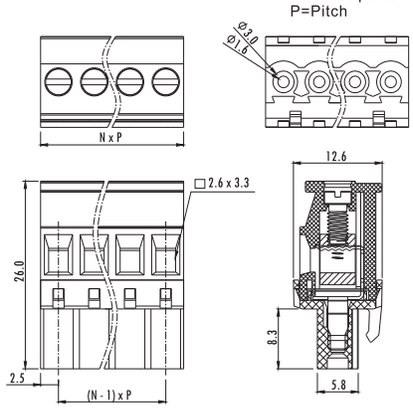

Unit: mm

SPECIFICATION

Electrical:

Rated Voltage	300V
Rated Current	15A

Mechanical:

Torque	0.4Nm(3.5Lb-In.)
operating Temp.	-40°C ~ 105°C
Striping length	7mm

Dimensions:

Wire range	28-12AWG
Pitch	5.0mm(.197”) 5.08mm(.200”) 7.5mm(.295”) 7.62mm(.300”)
Poles	2P - 24P/2P - 12P

Material:

Housing	PA66, UL94V-0
Screw	M2.5, Steel Cr^{3+}Zn Plated
Contact	Phosphor Bronze
Cage	Brass, Ni Plated

2ESGKBM

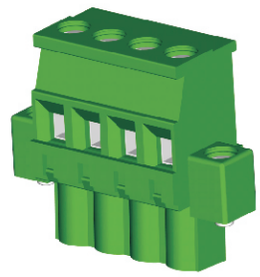

N=No. of poles
P=Pitch

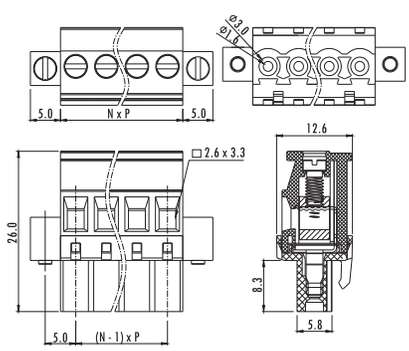

Unit: mm

SPECIFICATION

Electrical:

Rated Voltage	300V
Rated Current	15A

Mechanical:

Torque	0.4Nm(3.5Lb-In.)
operating Temp.	-40°C ~ 105°C
Striping length	7mm

Dimensions:

Wire range	28-12AWG
Pitch	5.0mm(.197”) 5.08mm(.200”) 7.5mm(.295”) 7.62mm(.300”)
Poles	2P - 22P/2P - 12P

Material:

Housing	PA66, UL94V-0
Screw	M2.5, Steel Cr^{3+}Zn Plated
Contact	Phosphor Bronze
Cage	Brass, Ni Plated

Sugo Industrial Company Limited - Email sales@sugo.com.hk / Tel. (852) 2790 1280 Fax. (852) 2304 8488 / www.sugo.com.hk
Sugo International Pty. Limited - Email sales@sugo-au.com / Tel. (61) 02 8385 0076 / www.sugo-au.com

PLUGGABLE TERMINAL BLOCKS

2ESGV

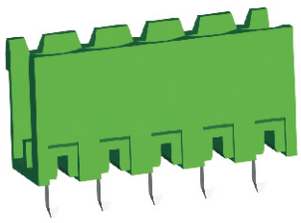

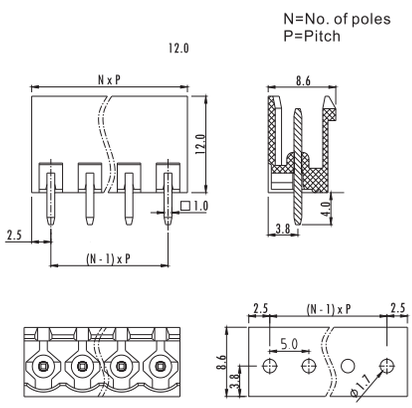

Unit: mm

SPECIFICATION

Electrical:

Rated Voltage	300V
Rated Current	15A

Mechanical:

Operating Temp.	-40°C ~ 105°C

Dimensions:

Pitch	5.0mm(.197”) 5.08mm(.200”) 7.5mm(.295”) 7.62mm(.300”)
Poles	2P - 24P/2P - 12P

Material:

Housing	PA66, UL94V-0
Contact	Brass, Ni Plated

2ESGR

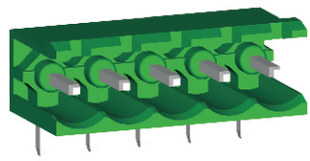

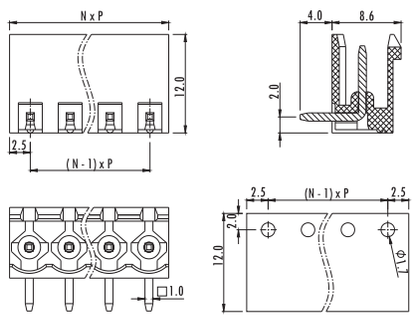

Unit: mm

SPECIFICATION

Electrical:

Rated Voltage	300V
Rated Current	15A

Mechanical:

Operating Temp.	-40°C ~ 105°C

Dimensions:

Pitch	5.0mm(.197”) 5.08mm(.200”) 7.5mm(.295”) 7.62mm(.300”)
Poles	2P - 24P/2P - 12P

Material:

Housing	PA66, UL94V-0
Contact	Brass, Ni Plated

2ESGVC

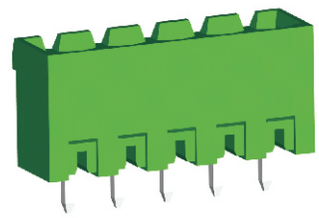

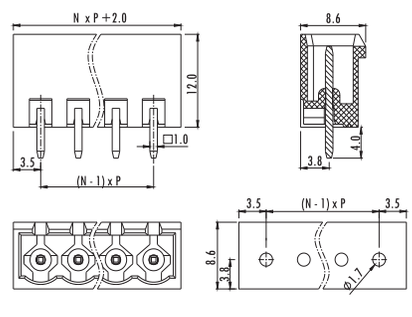

Unit: mm

SPECIFICATION

Electrical:

Rated Voltage	300V
Rated Current	15A

Mechanical:

Operating Temp.	-40°C ~ 105°C

Dimensions:

Pitch	5.0mm(.197”) 5.08mm(.200”) 7.5mm(.295”) 7.62mm(.300”)
Poles	2P - 24P/2P - 12P

Material:

Housing	PA66, UL94V-0
Contact	Brass, Ni Plated

Sugo Industrial Company Limited - Email sales@sugo.com.hk / Tel. (852) 2790 1280 Fax. (852) 2304 8488 / www.sugo.com.hk
Sugo International Pty. Limited - Email sales@sugo-au.com / Tel. (61) 02 8385 0076 / www.sugo-au.com

SUGO

PLUGGABLE TERMINAL BLOCKS

2ESGVM

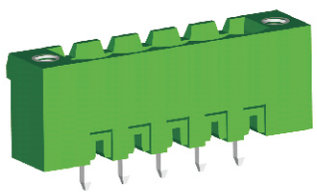

N=No. of poles
P=Pitch

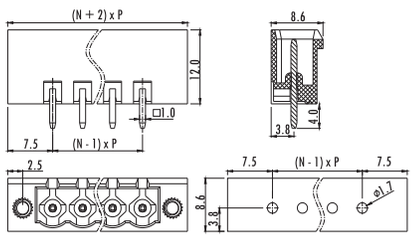

Unit: mm

SPECIFICATION

Electrical:

Rated Voltage	300V
Rated Current	15A

Mechanical:

Operating Temp.	-40°C ~ 105°C

Dimensions:

Pitch	5.0mm(.197”) 5.08mm(.200”) 7.5mm(.295”) 7.62mm(.300”)
Poles	2P - 24P/2P - 12P

Material:

Housing	PA66, UL94V-0
Contact	Brass, Ni Plated
Nut	M2.5 Brass

2ESGRC

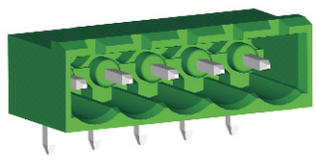

N=No. of poles
P=Pitch

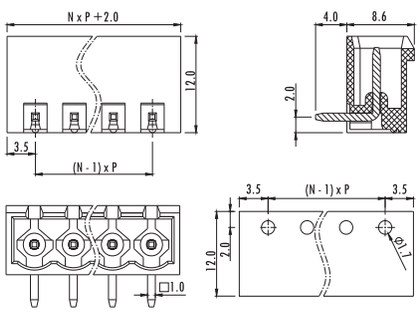

Unit: mm

SPECIFICATION

Electrical:

Rated Voltage	300V
Rated Current	15A

Mechanical:

Operating Temp.	-40°C ~ 105°C

Dimensions:

Pitch	5.0mm(.197”) 5.08mm(.200”) 7.5mm(.295”) 7.62mm(.300”)
Poles	2P - 24P/2P - 12P

Material:

Housing	PA66, UL94V-0
Contact	Brass, Ni Plated

2ESGRM

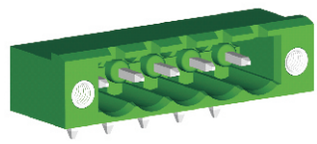

N=No. of poles
P=Pitch

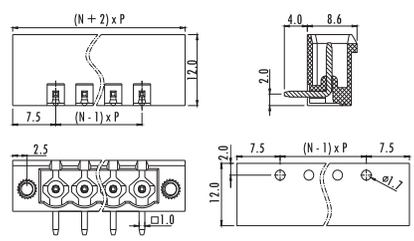

Unit: mm

SPECIFICATION

Electrical:

Rated Voltage	300V
Rated Current	15A

Mechanical:

Operating Temp.	-40°C ~ 105°C

Dimensions:

Pitch	5.0mm(.197”) 5.08mm(.200”) 7.5mm(.295”) 7.62mm(.300”)
Poles	2P - 24P/2P - 12P

Material:

Housing	PA66, UL94V-0
Contact	Brass, Ni Plated
Nut	M2.5 Brass

Sugo Industrial Company Limited - Email sales@sugo.com.hk / Tel. (852) 2790 1280 Fax. (852) 2304 8488 / www.sugo.com.hk
Sugo International Pty. Limited - Email sales@sugo-au.com / Tel. (61) 02 8385 0076 / www.sugo-au.com

SUGO

PLUGGABLE TERMINAL BLOCKS

2ESGVH

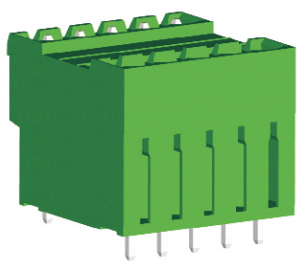

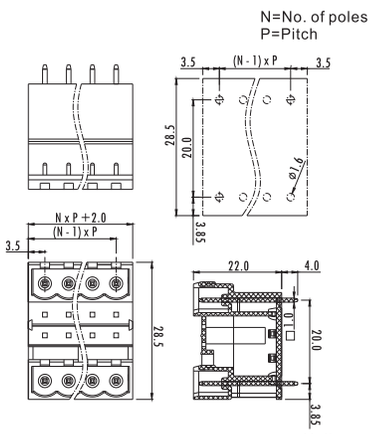

SPECIFICATION

Electrical:

Rated Voltage	300V
Rated Current	15A

Mechanical:

Operating Temp.	-40°C ~ 105°C

Dimensions:

Pitch	5.0mm(.197”) 5.08mm(.200”)
Poles	2*(2P - 24P)

Material:

Housing	PA66,UL94V-0
Contact	Brass, Tin Plated

2ESGRH

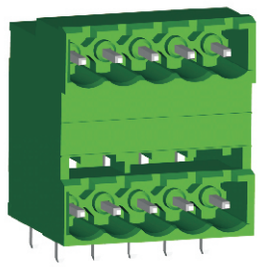

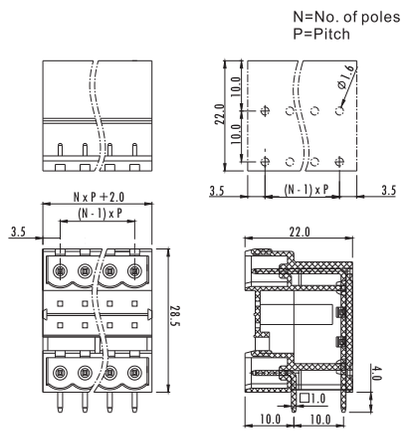

SPECIFICATION

Electrical:

Rated Voltage	300V
Rated Current	15A

Mechanical:

operating Temp.	-40°C ~ 105°C

Dimensions:

Pitch	5.0mm(.197”) 5.08mm(.200”)
Poles	2*(2P - 24P)

Material:

Housing	PA66,UL94V-0
Contact	Brass, Tin Plated

2ESGVHM

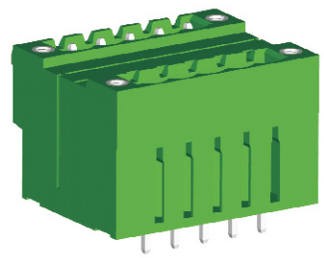

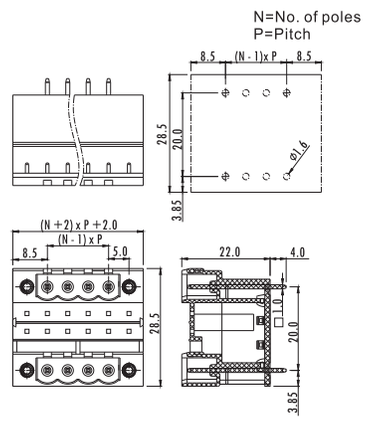

SPECIFICATION

Electrical:

Rated Voltage	300V
Rated Current	15A

Mechanical:

operating Temp.	-40°C ~ 105°C

Dimensions:

Pitch	5.0mm(.197”) 5.08mm(.200”)
Poles	2*(2P - 24P)

Material:

Housing	PA66,UL94V-0
Contact	Brass, Tin Plated
Nut	M2.5 Brass

Sugo Industrial Company Limited - Email sales@sugo.com.hk / Tel. (852) 2790 1280 Fax. (852) 2304 8488 / www.sugo.com.hk
Sugo International Pty. Limited - Email sales@sugo-au.com / Tel. (61) 02 8385 0076 / www.sugo-au.com

SUGO

PLUGGABLE TERMINAL BLOCKS

2ESGRHM

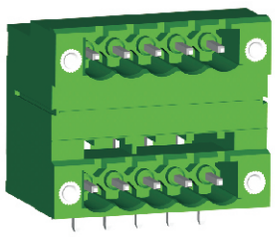

N=No. of poles
P=Pitch

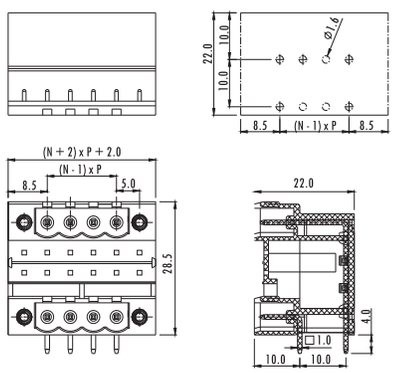

Unit: mm

SPECIFICATION

Electrical:

Rated Voltage	300V
Rated Current	15A

Mechanical:

Operating Temp.	-40°C ~ 105°C

Dimensions:

Pitch	5.0mm(.197”) 5.08mm(.200”)
Poles	2* 2P - 24P

Material:

Housing	PA66, UL94V-0
Nut	M2.5 Brass
Contact	Brass Tin Plated

2ESGKC

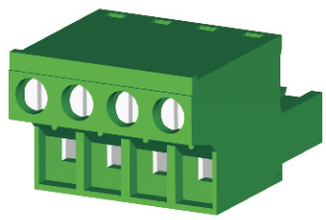

N=No. of poles
P=Pitch

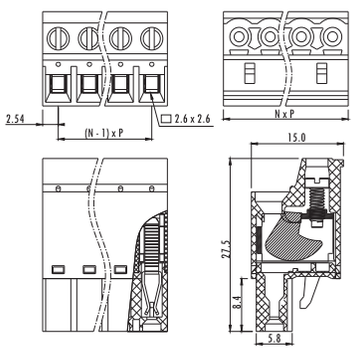

Unit: mm

SPECIFICATION

Electrical:

Rated Voltage	300V
Rated Current	10A

Mechanical:

Torque	0.4Nm(3.5Lb-In.)
Operating Temp.	-40°C ~ 105°C
Striping length	10mm

Dimensions:

Wire range	28-12AWG
Pitch	5.00mm(.197”) 5.08mm(.200”)
Poles	2P - 24P 2P - 12P

Material:

Housing	PA66, UL94V-0
Screw	M2.5, Steel Cr^{3+}Zn Plated
Contact	Phosphor Bronze
Cage	Steel

2ESGKCM

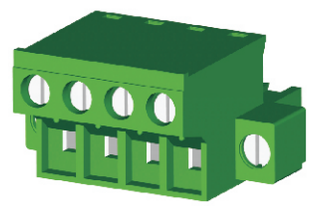

N=No. of poles
P=Pitch

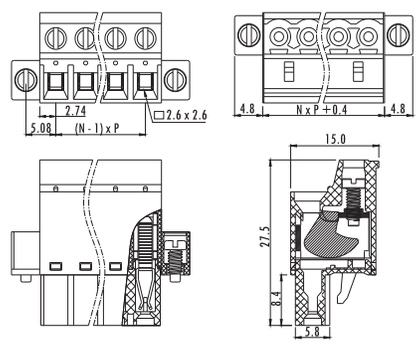

Unit: mm

SPECIFICATION

Electrical:

Rated Voltage	300V
Rated Current	10A

Mechanical:

Torque	0.4Nm(3.5Lb-In.)
Operating Temp.	-40°C ~ 105°C
Striping length	10mm

Dimensions:

Wire range	28-12AWG
Pitch	5.00mm(.197”) 5.08mm(.200”)
Poles	2P - 24P 2P - 12P

Material:

Housing	PA66, UL94V-0
Screw	M2.5, Steel Cr^{3+}Zn Plated
Contact	Phosphor Bronze
Cage	Steel

Sugo Industrial Company Limited - Email sales@sugo.com.hk / Tel. (852) 2790 1280 Fax. (852) 2304 8488 / www.sugo.com.hk
Sugo International Pty. Limited - Email sales@sugo-au.com / Tel. (61) 02 8385 0076 / www.sugo-au.com

SUGO

PLUGGABLE TERMINAL BLOCKS

2ESGKL

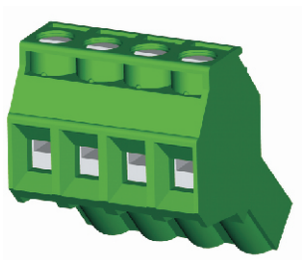

N=No. of poles
P=Pitch

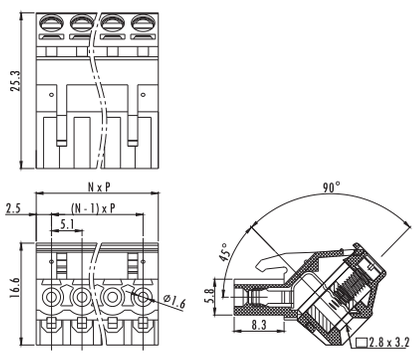

Unit: mm

SPECIFICATION

Electrical:

Rated Voltage	300V
Rated Current	10A

Mechanical:

Torque	0.4Nm(3.5Lb-In.)
Operating Temp.	-40°C ~ 105°C
Striping length	7mm

Dimensions:

Wire range	24-12AWG
Pitch	5.00mm(.197”) 5.08mm(.200”)
Poles	2P - 24P

Material:

Housing	PA66, UL94V-0
Screw	M2.5, Steel Cr^{3+}Zn Plated
Contact	Phosphor Bronze
Cage	Brass Ni Plated

2ESGKLM

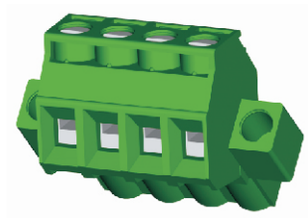

N=No. of poles
P=Pitch

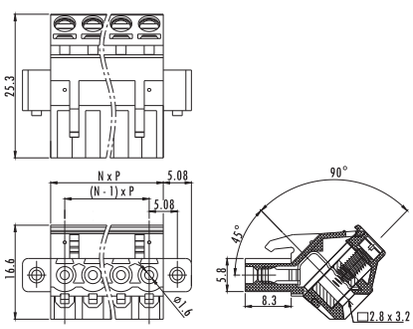

Unit: mm

SPECIFICATION

Electrical:

Rated Voltage	300V
Rated Current	10A

Mechanical:

Torque	0.4Nm(3.5Lb-In.)
Operating Temp.	-40°C ~ 105°C
Striping length	7mm

Dimensions:

Wire range	24-12AWG
Pitch	5.00mm(.197”) 5.08mm(.200”)
Poles	2P - 22P

Material:

Housing	PA66, UL94V-0
Screw	M2.5, Steel Cr^{3+}Zn Plated
Contact	Phosphor Bronze
Cage	Brass Ni Plated

2ESGKD

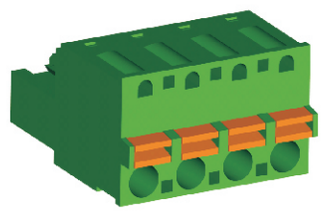

N=No. of poles
P=Pitch

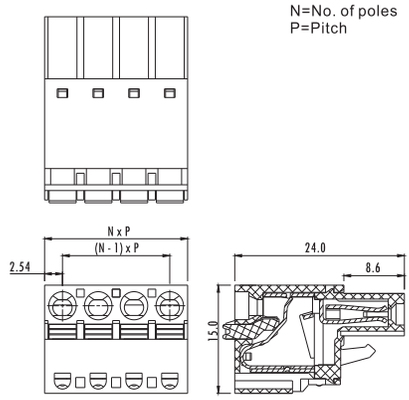

Unit: mm

SPECIFICATION

Electrical:

Rated Voltage	300V
Rated Current	10A

Mechanical:

Operating Temp.	-40°C ~ 105°C
Striping length	10mm

Dimensions:

Wire range	26-12AWG
Pitch	5.0mm(.197”) 5.08mm(.200”) 7.5mm(.295”) 7.62mm(.300”)
Poles	2P- 16P 2P - 12P

Material:

Housing	PA66, UL94V-0
Contact	Phosphor Bronze
Cage	Steel

Sugo Industrial Company Limited - Email sales@sugo.com.hk / Tel. (852) 2790 1280 Fax. (852) 2304 8488 / www.sugo.com.hk
Sugo International Pty. Limited - Email sales@sugo-au.com / Tel. (61) 02 8385 0076 / www.sugo-au.com

SUGO

PLUGGABLE TERMINAL BLOCKS

2ESGKDM

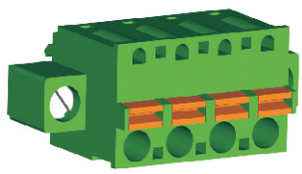

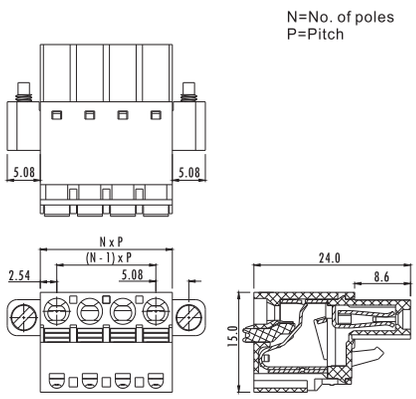

Unit: mm

SPECIFICATION

Electrical:

Rated Voltage	300V
Rated Current	10A

Mechanical:

Operating Temp.	-40°C ~ 105°C
Striping length	10mm

Dimensions:

Wire range	26-12AWG
Pitch	5.0mm(.197”) 5.08mm(.200”) 7.5mm(.295”) 7.62mm(.300”)
Poles	2P- 16P 2P - 12P

Material:

Housing	PA66, UL94V-0
Contact	Phosphor Bronze
Cage	Steel

2CSGB

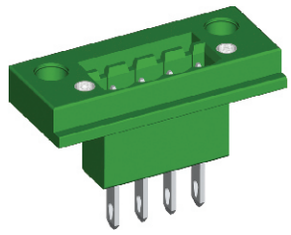

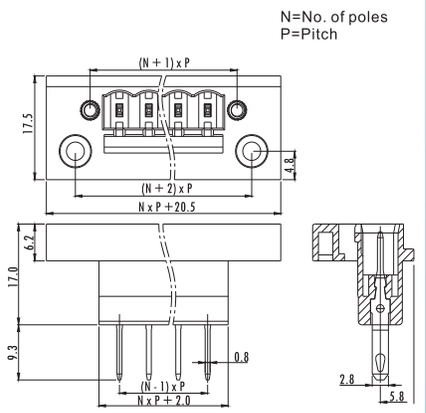

Unit: mm

SPECIFICATION

Electrical:

Rated Voltage	300V
Rated Current	15A

Mechanical:

Operating Temp.	-40°C ~ 105°C

Dimensions:

Pitch	5.0mm(.197”) 5.08mm(.200”)
Poles	2P - 22P

Material:

Housing	PA66, UL94V-0
Contact	Brass Tin Plated

For more information or other SUGO products

Please visit WWW.SUGO.COM.HK

Engineer Kit set

PIN Header / Box Header connector

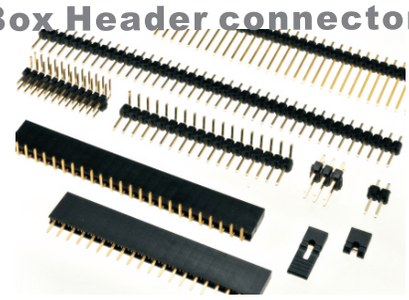

SPI Socket
IC Socket

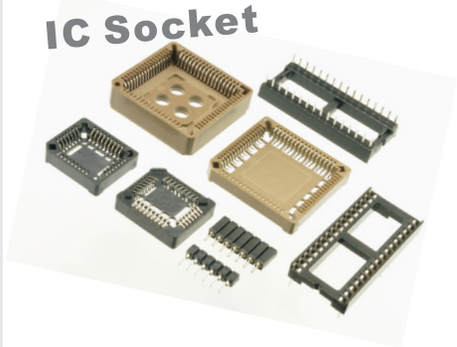

Sugo Industrial Company Limited - Email sales@sugo.com.hk / Tel. (852) 2790 1280 Fax. (852) 2304 8488 / www.sugo.com.hk
Sugo International Pty. Limited - Email sales@sugo-au.com / Tel. (61) 02 8385 0076 / www.sugo-au.com

SUGO

SCREWLESS TERMINAL BLOCKS

SG141V

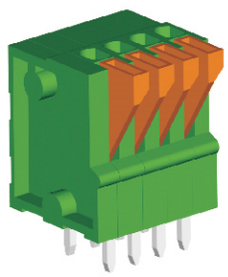

N=No. of poles
P=Pitch

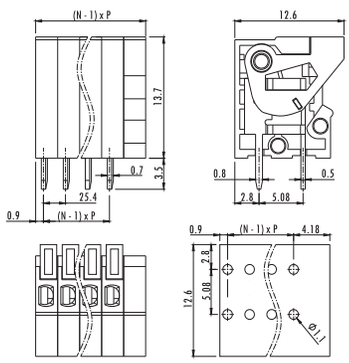

Unit: mm

SPECIFICATION

Electrical:

Rated Voltage	150V
Rated Current	2A

Mechanical:

Operating Temp.	-40°C ~ 105°C
Striping length	11mm

Dimensions:

Wire range	24-20AWG
Pitch	2.54mm(.100")
Poles	2P- 24P

Material:

Housing	PA66, UL94V-0
Contact	Brass, Tin Plated
Cage	Steel

SG141R

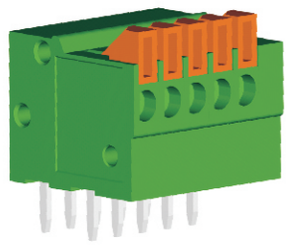

N=No. of poles
P=Pitch

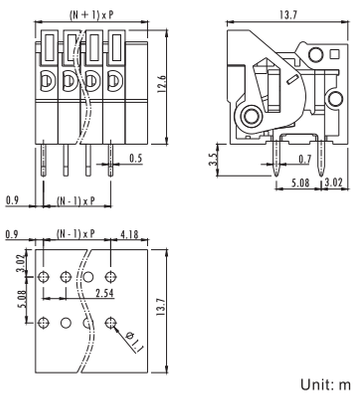

Unit: mm

SPECIFICATION

Electrical:

Rated Voltage	150V
Rated Current	2A

Mechanical:

Operating Temp.	-40°C ~ 105°C
Striping length	11mm

Dimensions:

Wire range	24-20AWG
Pitch	2.54mm(.100")
Poles	2P- 24P

Material:

Housing	PA66, UL94V-0
Contact	Brass, Tin Plated
Cage	Steel

SG142V

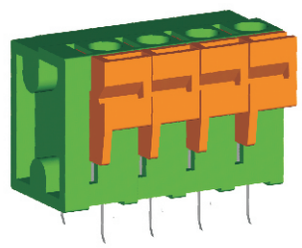

N=No. of poles
P=Pitch

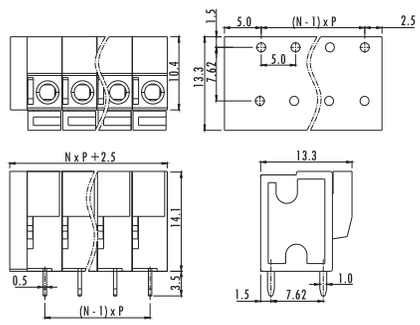

Unit: mm

SPECIFICATION

Electrical:

Rated Voltage	300V
Rated Current	10A

Mechanical:

Operating Temp.	-40°C ~ 105°C
Striping length	10mm

Dimensions:

Wire range	22-16AWG
Pitch	5.0mm(.197") 5.08mm(.200") 7.62mm(.300")
Poles	2P- 24P

Material:

Housing	PA66, UL94V-0
Contact	Brass, Tin Plated
Cage	Steel

Sugo Industrial Company Limited - Email sales@sugo.com.hk / Tel. (852) 2790 1280 Fax. (852) 2304 8488 / www.sugo.com.hk
Sugo International Pty. Limited - Email sales@sugo-au.com / Tel. (61) 02 8385 0076 / www.sugo-au.com

SUGO

SCREWLESS TERMINAL BLOCKS

SG142R

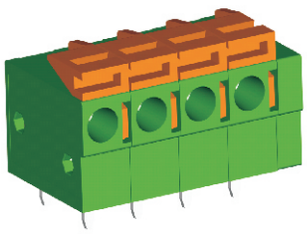

N=No. of poles
P=Pitch

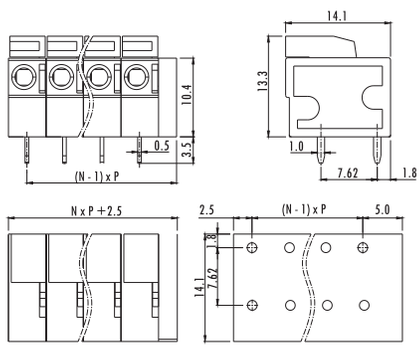

Unit: mm

SPECIFICATION

Electrical:

Rated Voltage	300V
Rated Current	10A

Mechanical:

Operating Temp.	-40°C ~ 105°C
Striping length	10mm

Dimensions:

Wire range	22-14AWG
Pitch	5.0mm(.197”) 5.08mm(.200”) 7.5mm(.295”) 7.62mm(.300”)
Poles	2P- 24P

Material:

Housing	PA66, UL94V-0
Contact	Brass, Tin Plated
Cage	Steel

SG142V

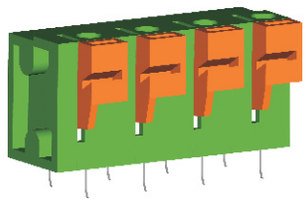

N=No. of poles
P=Pitch

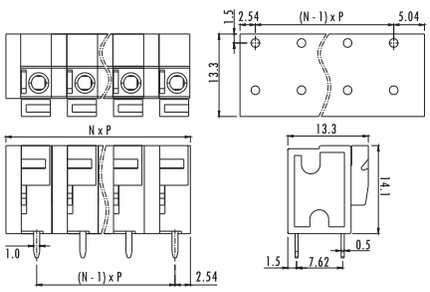

Unit: mm

SPECIFICATION

Electrical:

Rated Voltage	300V
Rated Current	10A

Mechanical:

Operating Temp.	-40°C ~ 105°C
Striping length	10mm

Dimensions:

Wire range	22-16AWG
Pitch	5.0mm(.197”) 5.08mm(.200”) 7.62mm(.300”)
Poles	2P- 24P

Material:

Housing	PA66, UL94V-0
Contact	Brass, Tin Plated
Cage	Steel

SG211R

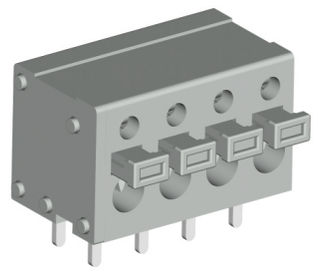

N=No. of poles
P=Pitch

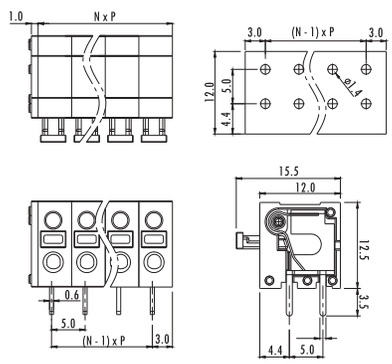

Unit: mm

SPECIFICATION

Electrical:

Rated Voltage	300V
Rated Current	8A

Mechanical:

Operating Temp.	-40°C ~ 105°C
Striping length	8-9mm

Dimensions:

Wire range	22-16AWG
Pitch	3.5mm(.138”) 5.00mm(.197”)
Poles	2P- 24P

Material:

Housing	PA66, UL94V-0
Contact	Brass, Tin Plated
Cage	Steel

Sugo Industrial Company Limited - Email sales@sugo.com.hk / Tel. (852) 2790 1280 Fax. (852) 2304 8488 / www.sugo.com.hk
Sugo International Pty. Limited - Email sales@sugo-au.com / Tel. (61) 02 8385 0076 / www.sugo-au.com

SCREWLESS TERMINAL BLOCKS

SG211V

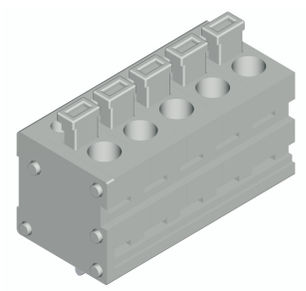

N=No. of poles
P=Pitch

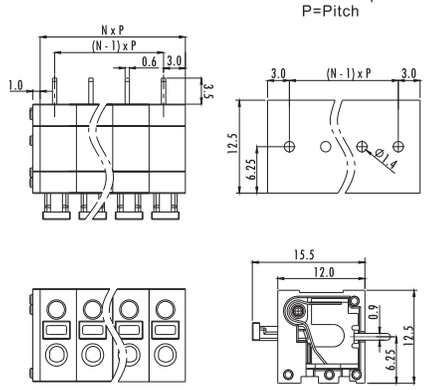

Unit: mm

SPECIFICATION

Electrical:

Rated Voltage	300V
Rated Current	8A

Mechanical:

Operating Temp.	-40°C ~ 105°C
Striping length	8-9mm

Dimensions:

Wire range	22-16AWG
Pitch	3.5mm(.138”) 5.00mm(.197”)
Poles	2P- 24P

Material:

Housing	PA66, UL94V-0
Contact	Brass, Tin Plated
Cage	Steel

SG250

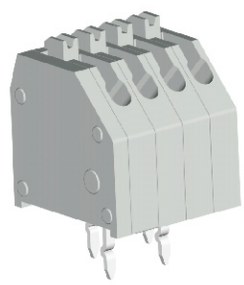

N=No. of poles
P=Pitch

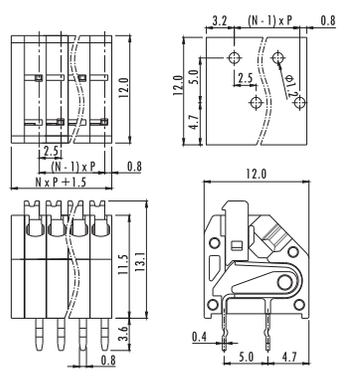

Unit: mm

SPECIFICATION

Electrical:

Rated Voltage	300V
Rated Current	2A

Mechanical:

Operating Temp.	-40°C ~ 105°C
Striping length	8.5-9.5mm

Dimensions:

Wire range	24-20AWG
Pitch	2.5mm(.098”) 2.54mm(.100”)
Poles	2P- 24P

Material:

Housing	PA66, UL94V-0
Contact	Phosphor Bronze
Cage	Steel

SG250L

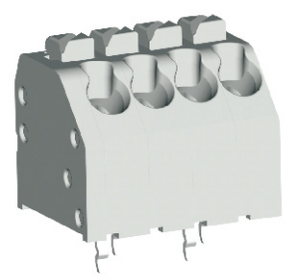

N=No. of poles
P=Pitch

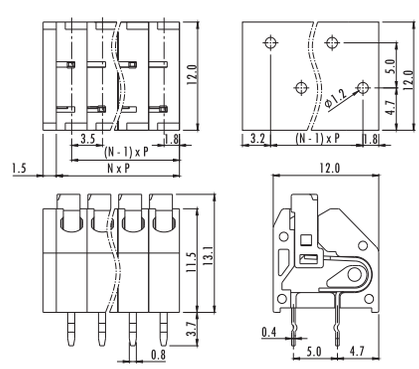

Unit: mm

SPECIFICATION

Electrical:

Rated Voltage	300V
Rated Current	7A

Mechanical:

Operating Temp.	-40°C ~ 105°C
Striping length	8.5-9.5mm

Dimensions:

Wire range	22-18AWG
Pitch	3.5mm(.138”) 7.0mm(.276”)
Poles	2P- 24P

Material:

Housing	PA66, UL94V-0
Contact	Phosphor Bronze
Cage	Steel

Sugo Industrial Company Limited - Email sales@sugo.com.hk / Tel. (852) 2790 1280 Fax. (852) 2304 8488 / www.sugo.com.hk
Sugo International Pty. Limited - Email sales@sugo-au.com / Tel. (61) 02 8385 0076 / www.sugo-au.com

SUGO

SCREWLESS TERMINAL BLOCKS

SG235

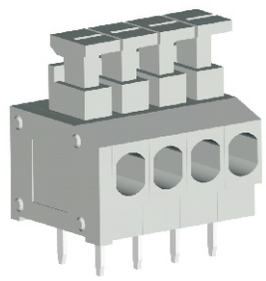

N=No. of poles
P=Pitch

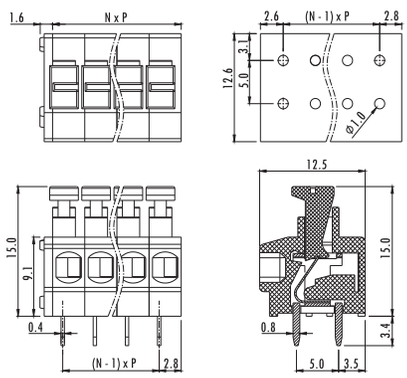

Unit: mm

SPECIFICATION

Electrical:

Rated Voltage	300V
Rated Current	5A

Mechanical:

Operating Temp.	-40°C ~ 105°C
Striping length	9-10mm

Dimensions:

Wire range	26-12AWG
Pitch	3.81mm(.150”) 5.0mm(.197”) 7.5mm(.295”) 10.0mm(.394”)
Poles	2P - 24P

Material:

Housing	PA66, UL94V-0
Contact	Phosphor Bronze Tin Plated

SG295

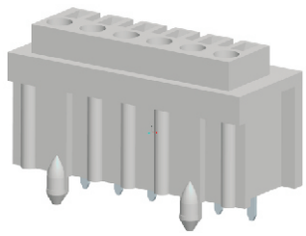

N=No. of poles
P=Pitch

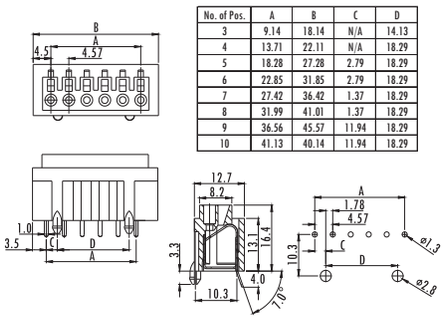

No. of Pos.	A	B	C	D
3	9.14	18.14	N/A	14.13
4	13.71	22.11	N/A	18.29
5	18.28	27.28	2.79	18.29
6	22.85	31.85	2.79	18.29
7	27.42	36.42	1.37	18.29
8	31.99	41.01	1.37	18.29
9	36.56	45.57	11.94	18.29
10	41.13	40.14	11.94	18.29

Unit: mm

SPECIFICATION

Electrical:

Rated Voltage	300V
Rated Current	2A

Mechanical:

Operating Temp.	-40°C ~ 105°C
Striping length	8-9mm

Dimensions:

Wire range	20-18AWG
Pitch	4.75mm(.180”)
Poles	3P- 10P

Material:

Housing	PA66, UL94V-0
Contact	Phosphor Bronze Tin Plated

SG237

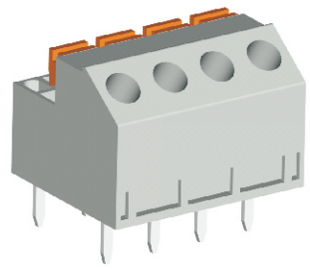

N=No. of poles
P=Pitch

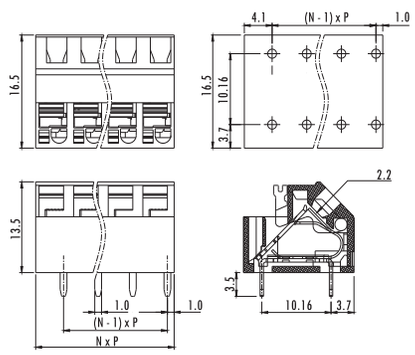

Unit: mm

SPECIFICATION

Electrical:

Rated Voltage	300V
Rated Current	10A

Mechanical:

Operating Temp.	-40°C ~ 105°C
Striping length	10mm

Dimensions:

Wire range	22-16AWG
Pitch	5.08mm(.200”)
Poles	2P- 7P

Material:

Housing	PA66, UL94V-0
Contact	Brass Tin Plated
Cage	Steel

Sugo Industrial Company Limited - Email sales@sugo.com.hk / Tel. (852) 2790 1280 Fax. (852) 2304 8488 / www.sugo.com.hk
Sugo International Pty. Limited - Email sales@sugo-au.com / Tel. (61) 02 8385 0076 / www.sugo-au.com

SUGO

PCB TERMINAL BLOCKS

SG381

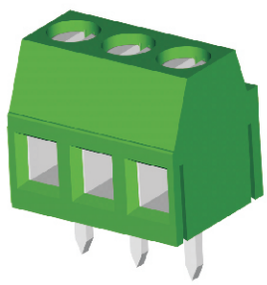

N=No. of poles
P=Pitch

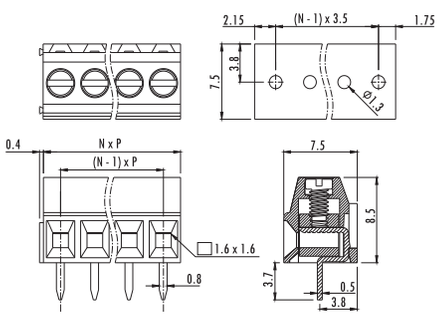

Unit: mm

SPECIFICATION

Electrical:

Rated Voltage	150V
Rated Current	10A

Mechanical:

Torque	0.2Nm(1.7Lb-In.)
Operating Temp.	-40°C ~ 105°C
Striping length	5mm

Dimensions:

Wire range	26-16AWG
Pitch	3.5mm(.138”) 3.81mm(.150”)
Poles	2P,3P - 24P

Material:

Housing	PA66, UL94V-0
Screw	M2 Steel Cr^{3+}Zn Plated
Contact	Phosphor Bronze
Cage	Brass, Ni Plated

SG381H

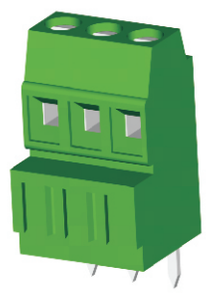

N=No. of poles
P=Pitch

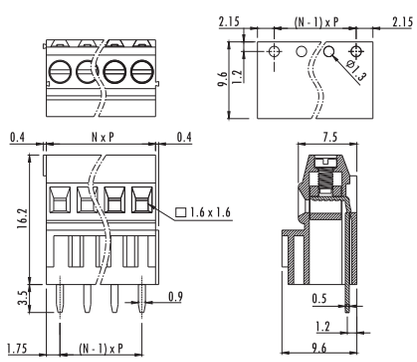

Unit: mm

SPECIFICATION

Electrical:

Rated Voltage	150V
Rated Current	10A

Mechanical:

Torque	0.2Nm(1.7Lb-In.)
Operating Temp.	-40°C ~ 105°C
Striping length	5mm

Dimensions:

Wire range	26-16AWG
Pitch	3.5mm(.138”) 3.81mm(.150”)
Poles	2P,3P - 24P

Material:

Housing	PA66, UL94V-0
Screw	M2 Steel Cr^{3+}Zn Plated
Contact	Phosphor Bronze
Cage	Brass, Ni Plated

SG381B

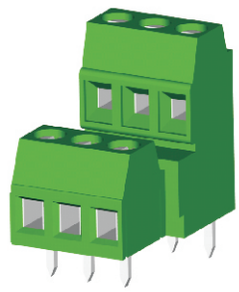

N=No. of poles
P=Pitch

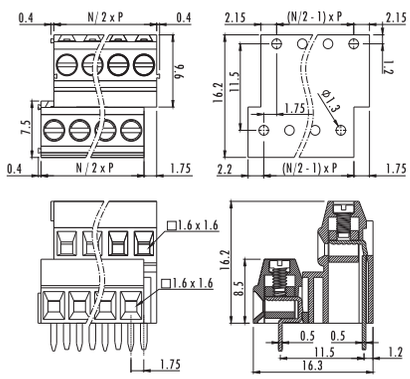

Unit: mm

SPECIFICATION

Electrical:

Rated Voltage	150V
Rated Current	10A

Mechanical:

Torque	0.2Nm(1.7Lb-In.)
Operating Temp.	-40°C ~ 105°C
Striping length	5mm

Dimensions:

Wire range	26-16AWG
Pitch	3.5mm(.138”) 3.81mm(.150”)
Poles	2*(2P,3P - 24P)

Material:

Housing	PA66, UL94V-0
Screw	M2 Steel Cr^{3+}Zn Plated
Contact	Phosphor Bronze
Cage	Brass, Ni Plated

Sugo Industrial Company Limited - Email sales@sugo.com.hk / Tel. (852) 2790 1280 Fax. (852) 2304 8488 / www.sugo.com.hk
Sugo International Pty. Limited - Email sales@sugo-au.com / Tel. (61) 02 8385 0076 / www.sugo-au.com

PCB TERMINAL BLOCKS

SG381A

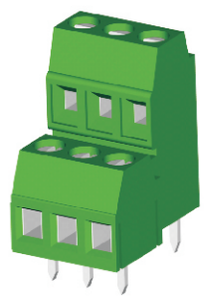

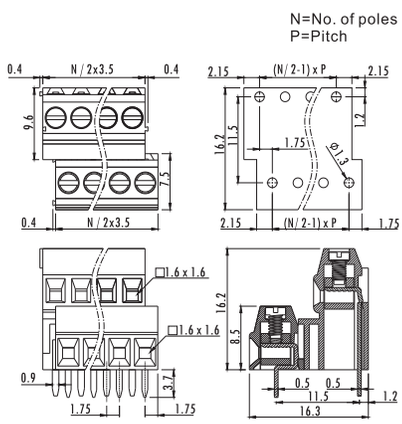

SPECIFICATION

Electrical:

Rated Voltage	150V
Rated Current	10A

Mechanical:

Torque	0.2Nm(1.7Lb-In.)
Operating Temp.	-40°C ~ 105°C
Striping length	5mm

Dimensions:

Wire range	26-16AWG
Pitch	3.5mm(.138”) 3.81mm(.150”)
Poles	2*(2P,3P - 24P)

Material:

Housing	PA66, UL94V-0
Screw	M2 Steel Cr^{3+}Zn Plated
Contact	Phosphor Bronze
Cage	Brass, Ni Plated

SG330

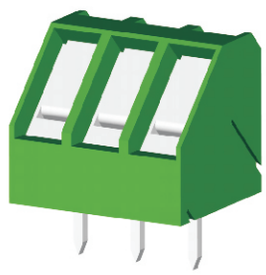

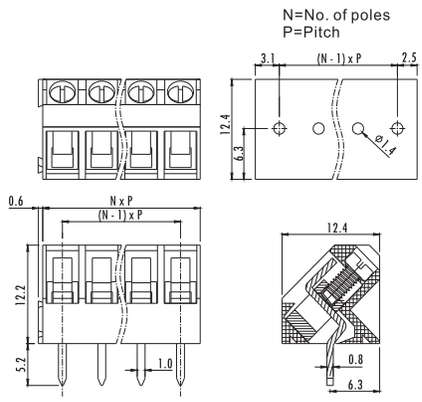

SPECIFICATION

Electrical:

Rated Voltage	300V
Rated Current	15A

Mechanical:

Torque	0.4Nm(3.5Lb-In.)
Operating Temp.	-30°C ~ 105°C
Striping length	7mm

Dimensions:

Wire range	22-12AWG
Pitch	5.0mm(.197”)
Poles	2P,3P - 24P

Material:

Housing	PA66, UL94V-0
Screw	M2.5 Steel Cr^{3+}Zn Plated
Contact	Brass Tin Plated
Cage	Brass Ni Plated

SG103

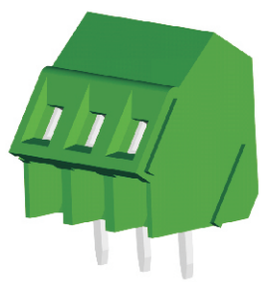

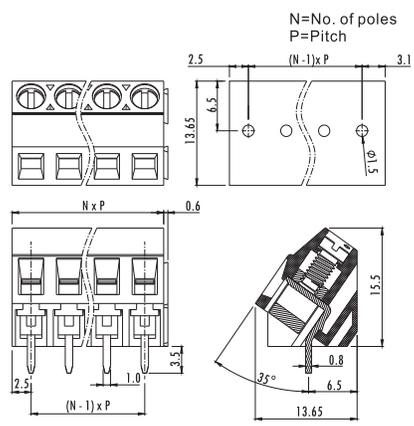

SPECIFICATION

Electrical:

Rated Voltage	300V
Rated Current	10A

Mechanical:

Torque	0.4Nm(3.5Lb-In.)
Operating Temp.	-40°C ~ 105°C
Striping length	7mm

Dimensions:

Wire range	24-12AWG
Pitch	5.0mm(.200”)
Poles	2P,3P - 24P

Material:

Housing	PA66, UL94V-0
Screw	M2.5 Steel Cr^{3+}Zn Plated
Contact	Brass Tin Plated
Cage	Brass Ni Plated

Sugo Industrial Company Limited - Email sales@sugo.com.hk / Tel. (852) 2790 1280 Fax. (852) 2304 8488 / www.sugo.com.hk
Sugo International Pty. Limited - Email sales@sugo-au.com / Tel. (61) 02 8385 0076 / www.sugo-au.com

SUGO

PCB TERMINAL BLOCKS

SG103L

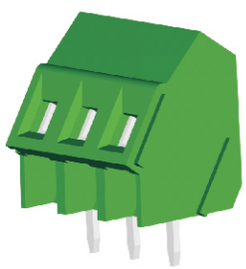

N=No. of poles
P=Pitch

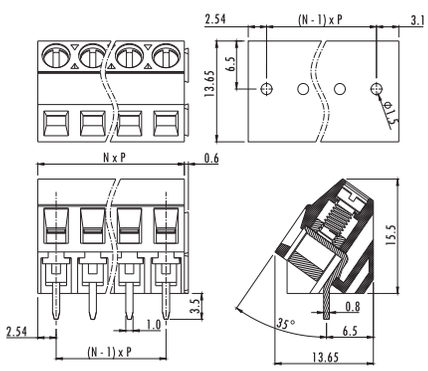

Unit: mm

SPECIFICATION

Electrical:

Rated Voltage	300V
Rated Current	10A

Mechanical:

Torque	0.4Nm(3.5Lb-In.)
Operating Temp.	-40°C ~ 105°C
Striping length	7mm

Dimensions:

Wire range	24-12AWG
Pitch	5.00mm(.197”) 7.50mm(.295”)
Poles	2P,3P - 24P

Material:

Housing	PA66, UL94V-0
Screw	M2.5 Steel Cr^{3+}Zn Plated
Contact	Brass Tin Plated
Cage	Brass Ni Plated

SG500

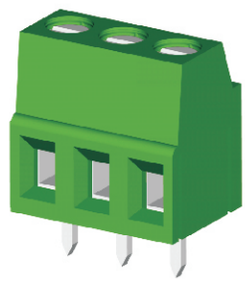

N=No. of poles
P=Pitch

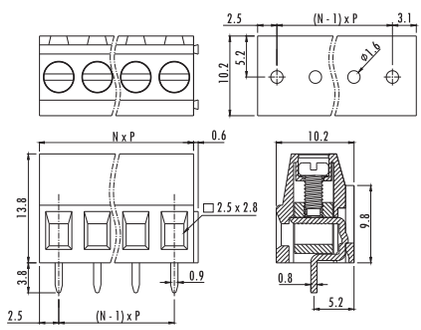

Unit: mm

SPECIFICATION

Electrical:

Rated Voltage	300V
Rated Current	10A

Mechanical:

Torque	0.4Nm(3.5Lb-In.)
Operating Temp.	-40°C ~ 105°C
Striping length	7mm

Dimensions:

Wire range	24-12AWG
Pitch	5.00mm(.197”) 5.08mm(.200”)
Poles	2P,3P - 24P

Material:

Housing	PA66, UL94V-0
Screw	M2.5 Steel Cr^{3+}Zn Plated
Contact	Brass Tin Plated
Cage	Brass Ni Plated

SG500H

N=No. of poles
P=Pitch

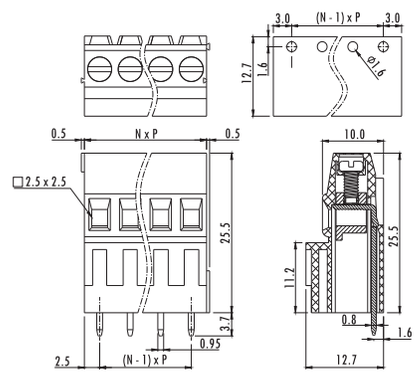

Unit: mm

SPECIFICATION

Electrical:

Rated Voltage	300V
Rated Current	20A

Mechanical:

Torque	0.4Nm(3.5Lb-In.)
Operating Temp.	-40°C ~ 105°C
Striping length	7mm

Dimensions:

Wire range	28-12AWG
Pitch	5.00mm(.197”) 5.08mm(.200”)
Poles	2P,3P - 24P

Material:

Housing	PA66, UL94V-0
Screw	M2.5 Steel Cr^{3+}Zn Plated
Contact	Brass Tin Plated
Cage	Brass Ni Plated

Sugo Industrial Company Limited - Email sales@sugo.com.hk / Tel. (852) 2790 1280 Fax. (852) 2304 8488 / www.sugo.com.hk
Sugo International Pty. Limited - Email sales@sugo-au.com / Tel. (61) 02 8385 0076 / www.sugo-au.com

PCB TERMINAL BLOCKS

SG500B

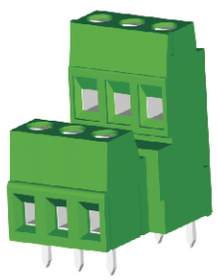

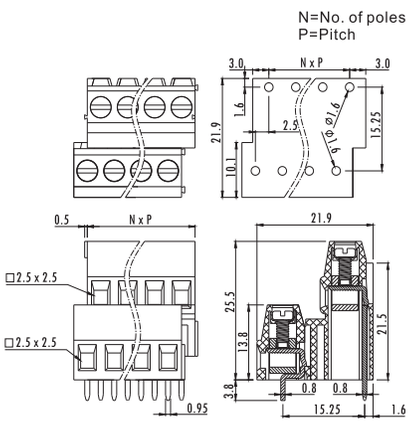

SPECIFICATION

Electrical:

Rated Voltage	300V
Rated Current	10A

Mechanical:

Torque	0.4Nm(3.5Lb-In.)
Operating Temp.	-40°C ~ 105°C
Striping length	7mm

Dimensions:

Wire range	24-12AWG
Pitch	5.00mm(.197”) 5.08mm(.200”)
Poles	2*(2P,3P - 24P)

Material:

Housing	PA66, UL94V-0
Screw	M2.5 Steel Cr^{3+}Zn Plated
Contact	Brass Tin Plated
Cage	Brass Ni Plated

SG500A

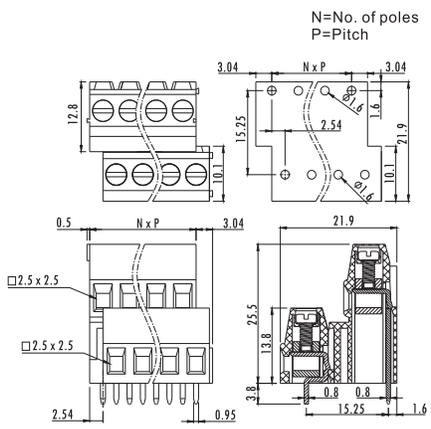

SPECIFICATION

Electrical:

Rated Voltage	300V
Rated Current	10A

Mechanical:

Torque	0.4Nm(3.5Lb-In.)
Operating Temp.	-40°C ~ 105°C
Striping length	7mm

Dimensions:

Wire range	24-12AWG
Pitch	5.00mm(.197”) 5.08mm(.200”)
Poles	2*(2P,3P - 24P

Material:

Housing	PA66, UL94V-0
Screw	M2.5 Steel Cr^{3+}Zn Plated
Contact	Brass Tin Plated
Cage	Brass Ni Plated

SG128

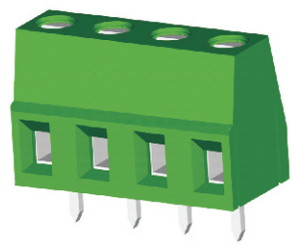

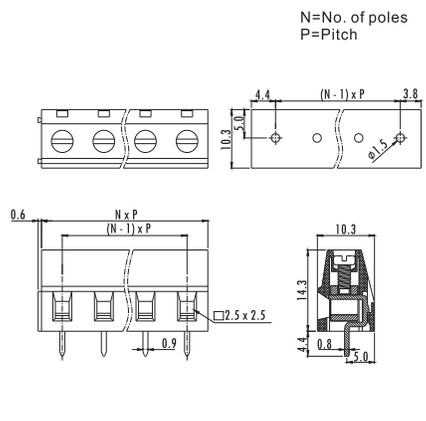

SPECIFICATION

Electrical:

Rated Voltage	300V
Rated Current	10A

Mechanical:

Torque	0.4Nm(3.5Lb-In.)
Operating Temp.	-40°C ~ 105°C
Striping length	7mm

Dimensions:

Wire range	24-12AWG
Pitch	5.00mm(.197”) 7.50mm(.295”)
Poles	2P,3P - 24P

Material:

Housing	PA66, UL94V-0
Screw	M2.5 Steel Cr^{3+}Zn Plated
Contact	Brass Tin Plated
Cage	Brass Ni Plated

Sugo Industrial Company Limited - Email sales@sugo.com.hk / Tel. (852) 2790 1280 Fax. (852) 2304 8488 / www.sugo.com.hk
Sugo International Pty. Limited - Email sales@sugo-au.com / Tel. (61) 02 8385 0076 / www.sugo-au.com

SUGO

PCB TERMINAL BLOCKS

SG125

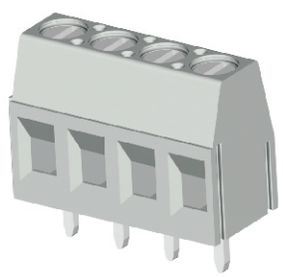

N=No. of poles
P=Pitch

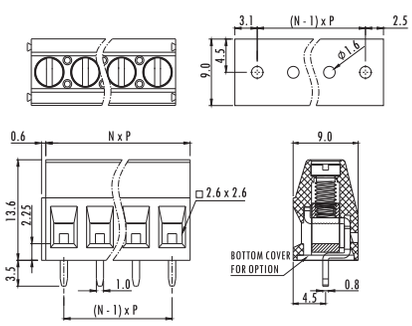

Unit: mm

SPECIFICATION

Electrical:

Rated Voltage	300V
Rated Current	10A

Mechanical:

Torque	0.4Nm(3.5Lb-In.)
Operating Temp.	-40°C ~ 105°C
Striping length	7mm

Dimensions:

Wire range	24-12AWG
Pitch	5.0mm(.197")
Poles	2P,3P - 24P

Material:

Housing	PA66, UL94V-0
Screw	M2.5 Steel Cr^{3+}Zn Plated
Contact	Brass Tin Plated
Cage	Brass Ni Plated

SG125R

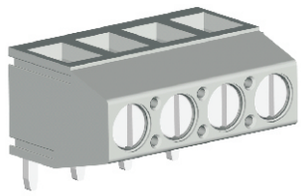

N=No. of poles
P=Pitch

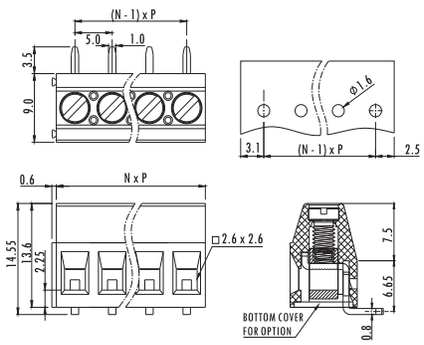

Unit: mm

SPECIFICATION

Electrical:

Rated Voltage	300V
Rated Current	10A

Mechanical:

Torque	0.4Nm(3.5Lb-In.)
Operating Temp.	-40°C ~ 105°C
Striping length	7mm

Dimensions:

Wire range	24-12AWG
Pitch	5.0mm(.197")
Poles	2P,3P - 24P

Material:

Housing	PA66, UL94V-0
Screw	M2.5 Steel Cr^{3+}Zn Plated
Contact	Brass Tin Plated
Cage	Brass Ni Plated

SG129

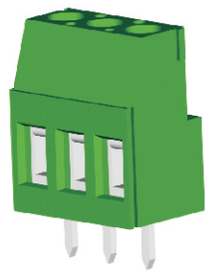

N=No. of poles
P=Pitch

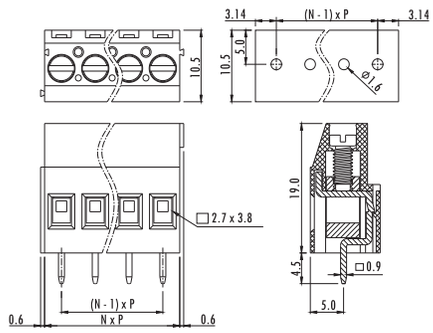

Unit: mm

SPECIFICATION

Electrical:

Rated Voltage	300V
Rated Current	20A

Mechanical:

Torque	0.5Nm(4.4Lb-In.)
Operating Temp.	-40°C ~ 105°C
Striping length	7mm

Dimensions:

Wire range	26-12AWG
Pitch	5.0mm(.197") 5.08mm(.200") 7.5mm(.295") 7.62mm(.300")
Poles	2P,3P - 24P

Material:

Housing	PA66, UL94V-0
Screw	M3 STEEL, Cr^{3+}Zn Plated
Contact	Brass, Tin Plated
Cage	Brass, Ni Plated

Sugo Industrial Company Limited - Email sales@sugo.com.hk / Tel. (852) 2790 1280 Fax. (852) 2304 8488 / www.sugo.com.hk
Sugo International Pty. Limited - Email sales@sugo-au.com / Tel. (61) 02 8385 0076 / www.sugo-au.com

PCB TERMINAL BLOCKS

SG129R

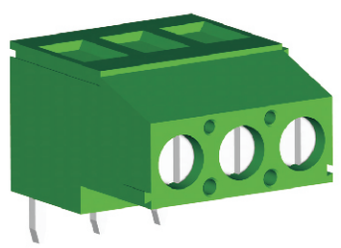

N=No. of poles
P=Pitch

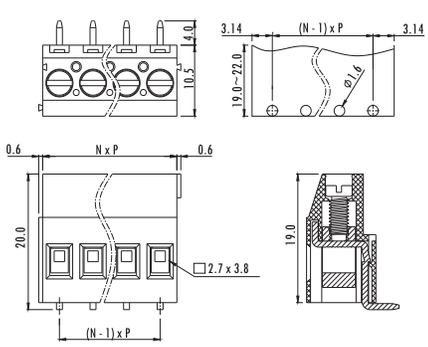

Unit: mm

SPECIFICATION

Electrical:

Rated Voltage	300V
Rated Current	20A

Mechanical:

Torque	0.5Nm(4.4Lb-In.)
Operating Temp.	-40°C ~ 105°C
Striping length	7mm

Dimensions:

Wire range	26-12AWG
Pitch	5.0mm(.197”) 5.08mm(.200”) 7.5mm(.295”) 7.62mm(.300”)
Poles	2P,3P - 24P

Material:

Housing	PA66, UL94V-0
Screw	M3 Steel, Cr^{3+}Zn Plated
Contact	Brass, Tin Plated
Cage	Brass, Ni Plated

SG127

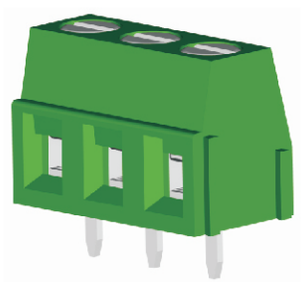

N=No. of poles
P=Pitch

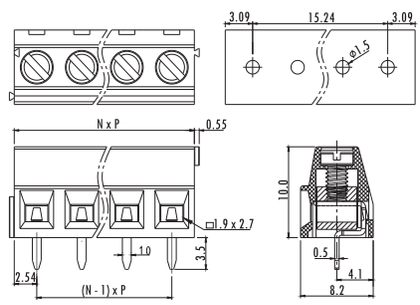

Unit: mm

SPECIFICATION

Electrical:

Rated Voltage	300V
Rated Current	12A

Mechanical:

Torque	0.4Nm(3.5Lb-In.)
Operating Temp.	-40°C ~ 105°C
Striping length	6mm

Dimensions:

Wire range	26-14AWG
Pitch	5.0mm(.197”) 5.08mm(.200”) 7.5mm(.295”) 7.62mm(.300”)
Poles	2P,3P - 24P

Material:

Housing	PA66, UL94V-0
Screw	M2.5 Steel, Cr^{3+}Zn Plated
Contact	Brass, Tin Plated
Cage	Brass, Ni Plated

SG130

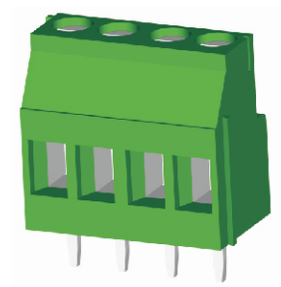

N=No. of poles
P=Pitch

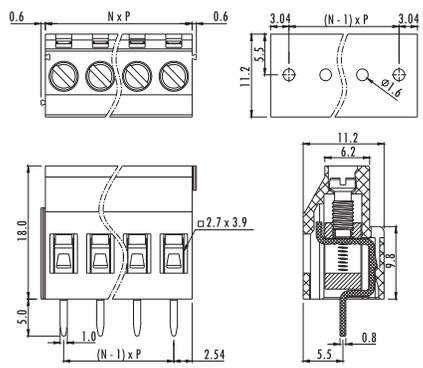

Unit: mm

SPECIFICATION

Electrical:

Rated Voltage	300V
Rated Current	20A

Mechanical:

Torque	0.5Nm(4.4Lb-In.)
Operating Temp.	-40°C ~ 105°C
Striping length	7mm

Dimensions:

Wire range	26-12AWG
Pitch	5.0mm(.197”) 5.08mm(.200”) 7.5mm(.295”) 7.62mm(.300”)
Poles	2P,3P - 24P

Material:

Housing	PA66, UL94V-0
Screw	M3 Steel, Cr^{3+}Zn Plated
Contact	Brass, Tin Plated
Cage	Brass, Ni Plated

Sugo Industrial Company Limited - Email sales@sugo.com.hk / Tel. (852) 2790 1280 Fax. (852) 2304 8488 / www.sugo.com.hk
Sugo International Pty. Limited - Email sales@sugo-au.com / Tel. (61) 02 8385 0076 / www.sugo-au.com

PCB TERMINAL BLOCKS

SG128RO

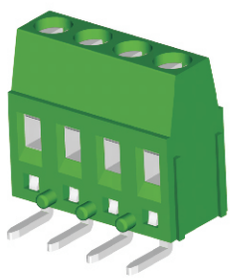

N=No. of poles
P=Pitch

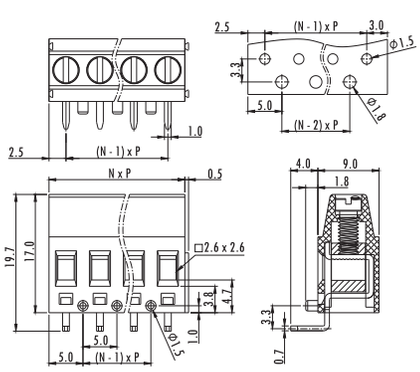

Unit: mm

SPECIFICATION

Electrical:

Rated Voltage	300V
Rated Current	10A

Mechanical:

Torque	0.4Nm(3.5Lb-In.)
Operating Temp.	-40°C ~ 105°C
Striping length	7mm

Dimensions:

Wire range	24-12AWG
Pitch	5.0mm(.197")
Poles	2P,3P - 24P

Material:

Housing	PA66, UL94V-0
Screw	M2.5 Steel, Cr^{3+}Zn Plated
Contact	Brass Tin Plated
Cage	Brass Ni Plated

SG127A

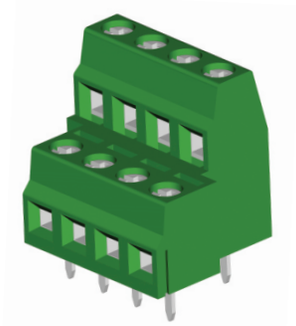

N=No. of poles
P=Pitch

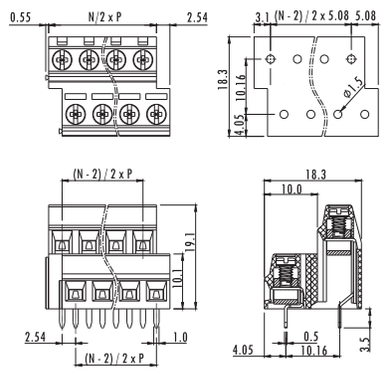

Unit: mm

SPECIFICATION

Electrical:

Rated Voltage	300V
Rated Current	12A

Mechanical:

Torque	0.4Nm(3.5Lb-In.)
Operating Temp.	-40°C ~ 105°C
Striping length	6mm

Dimensions:

Wire range	26-14AWG
Pitch	5.0mm(.197") 5.08mm(.200")
Poles	2*(2P,3P - 24P)

Material:

Housing	PA66, UL94V-0
Screw	M2.5 Steel, Cr^{3+}Zn Plated
Contact	Brass Tin Plated
Cage	Brass Ni Plated

SG636

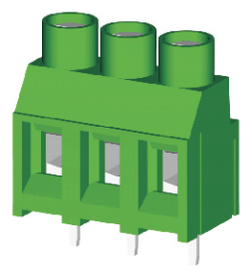

N=No. of poles
P=Pitch

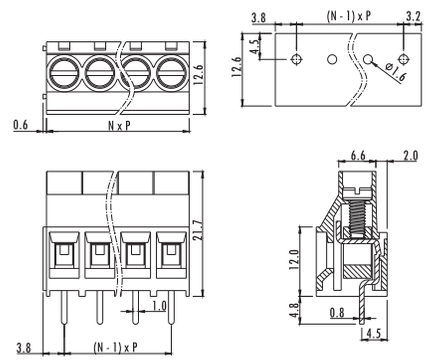

Unit: mm

SPECIFICATION

Electrical:

Rated Voltage	300V
Rated Current	30A

Mechanical:

Torque	0.5Nm(4.4Lb-In.)
Operating Temp.	-40°C ~ 105°C
Striping length	8mm

Dimensions:

Wire range	26-10AWG
Pitch	6.35mm(.250") 7.62mm(.300") 9.52mm(0.374")
Poles	2P,3P - 24P

Material:

Housing	PA66, UL94V-0
Screw	M3 Steel, Cr^{3+}Zn Plated
Contact	Copper, Tin Plated
Cage	Brass, Ni Plated

Sugo Industrial Company Limited - Email sales@sugo.com.hk / Tel. (852) 2790 1280 Fax. (852) 2304 8488 / www.sugo.com.hk
Sugo International Pty. Limited - Email sales@sugo-au.com / Tel. (61) 02 8385 0076 / www.sugo-au.com

PCB TERMINAL BLOCKS

SG950

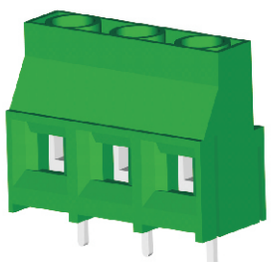

N=No. of poles
P=Pitch

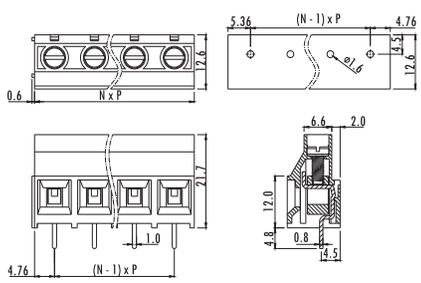

Unit: mm

SPECIFICATION

Electrical:

Rated Voltage	300V
Rated Current	30A

Mechanical:

Torque	
Operating Temp.	-40°C ~ 105°C
Striping length	8-9mm

Dimensions:

Wire range	26-10AWG
Pitch	9.52mm(.374")
Poles	2P,3P - 24P

Material:

Housing	PA66, UL94V-0
Screw	M3 Steel, Cr^{3+}Zn Plated
Contact	Copper Tin Plated
Cage	Brass Ni Plated

SG136

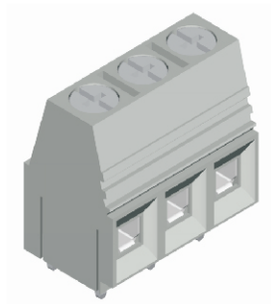

N=No. of poles
P=Pitch

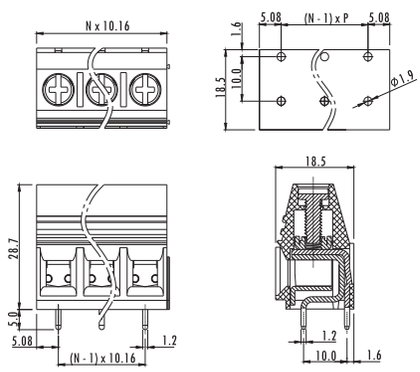

Unit: mm

SPECIFICATION

Electrical:

Rated Voltage	600V
Rated Current	50A

Mechanical:

Torque	
Operating Temp.	-40°C ~ 105°C
Striping length	10mm

Dimensions:

Wire range	20-6AWG
Pitch	10.16mm(.400")
Poles	2P,3P - 24P

Material:

Housing	PA66, UL94V-0
Screw	M4 Steel, Cr^{3+}Zn Plated
Contact	Copper Tin Plated
Cage	Brass Ni Plated

SG636C

N=No. of poles
P=Pitch

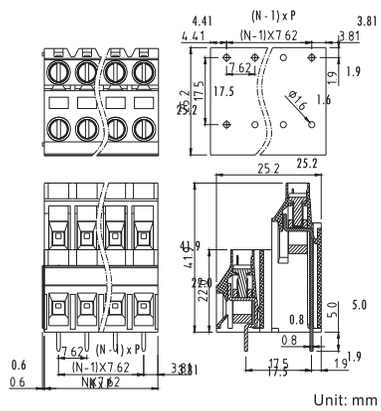

Unit: mm

SPECIFICATION

Electrical:

Rated Voltage	300V
Rated Current	30A

Mechanical:

Torque	0.5Nm(4.4Lb-In.)
Operating Temp.	-40°C ~ 105°C
Striping length	8mm

Dimensions:

Wire range	26-10AWG
Pitch	6.35mm(.250") 9.52mm(.374")
Poles	2*(2P,3P - 24P

Material:

Housing	PA66, UL94V-0
Screw	M3 Steel, Cr^{3+}Zn Plated
Contact	Copper Tin Plated
Cage	Brass, Ni Plated

Sugo Industrial Company Limited - Email sales@sugo.com.hk / Tel. (852) 2790 1280 Fax. (852) 2304 8488 / www.sugo.com.hk
Sugo International Pty. Limited - Email sales@sugo-au.com / Tel. (61) 02 8385 0076 / www.sugo-au.com

PCB TERMINAL BLOCKS

SG340

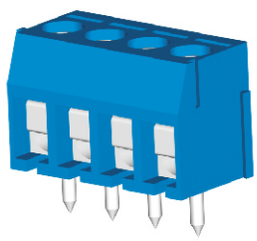

N=No. of poles
P=Pitch

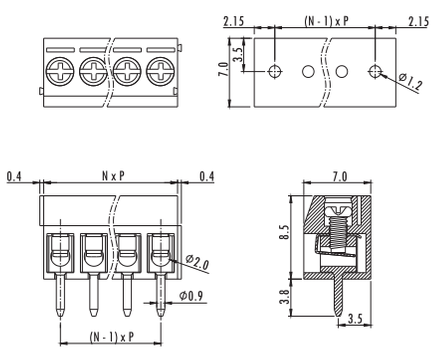

Unit: mm

SPECIFICATION

Electrical:

Rated Voltage	300V
Rated Current	7A

Mechanical:

Torque	0.2Nm(1.7Lb-In.)
Operating Temp.	-40°C ~ 105°C
Striping length	5-6mm

Dimensions:

Wire range	24-18AWG
Pitch	3.5mm(.138”) 3.81mm(.150”)
Poles	2P,3P - 24P

Material:

Housing	PA66, UL94V-0
Screw	M2 Steel, Cr^{3+}Zn Plated
Contact	Brass Tin Plated
Cage	Phosphor Bronze

SG340R

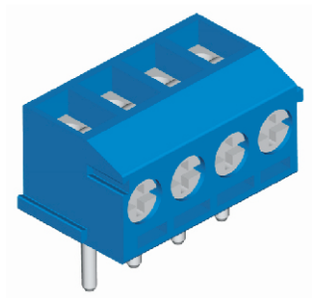

N=No. of poles
P=Pitch

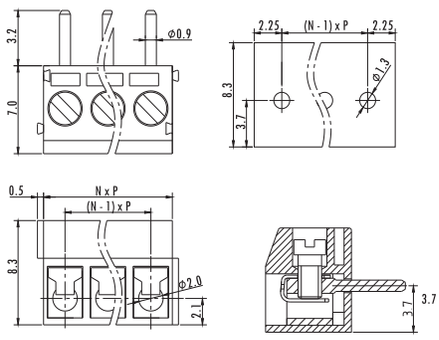

Unit: mm

SPECIFICATION

Electrical:

Rated Voltage	300V
Rated Current	7A

Mechanical:

Torque	0.2Nm(1.7Lb-In.)
Operating Temp.	-40°C ~ 105°C
Striping length	5-6mm

Dimensions:

Wire range	24-18AWG
Pitch	3.5mm(.138”) 3.81mm(.150”)
Poles	2P,3P - 24P

Material:

Housing	PA66, UL94V-0
Screw	M2 Steel, Cr^{3+}Zn Plated
Contact	Brass Tin Plated
Cage	Phosphor Bronze

SG350

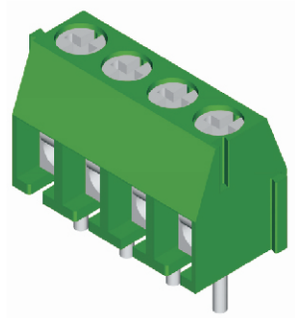

N=No. of poles
P=Pitch

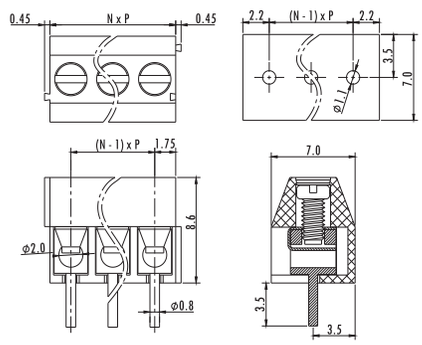

Unit: mm

SPECIFICATION

Electrical:

Rated Voltage	300V
Rated Current	7A

Mechanical:

Torque	0.2Nm(1.7Lb-In.)
Operating Temp.	-40°C ~ 105°C
Striping length	5-6mm

Dimensions:

Wire range	24-18AWG
Pitch	3.5mm(.138”) 3.96mm(.156”)
Poles	2P,3P - 24P

Material:

Housing	PA66, UL94V-0
Screw	M2 Steel, Cr^{3+}Zn Plated
Contact	Brass Tin Plated
Cage	Phosphor Bronze

Sugo Industrial Company Limited - Email sales@sugo.com.hk / Tel. (852) 2790 1280 Fax. (852) 2304 8488 / www.sugo.com.hk
Sugo International Pty. Limited - Email sales@sugo-au.com / Tel. (61) 02 8385 0076 / www.sugo-au.com

PCB TERMINAL BLOCKS

SG350R

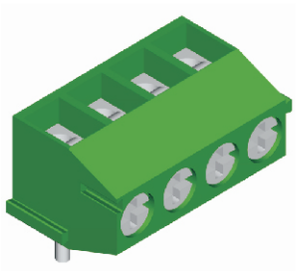

N=No. of poles
P=Pitch

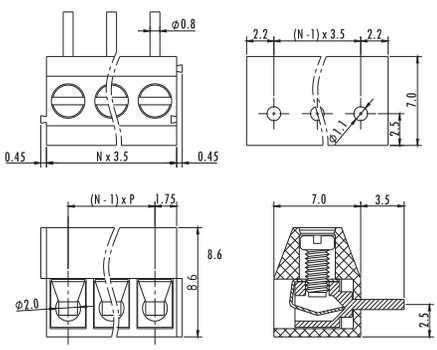

Unit: mm

SPECIFICATION

Electrical:

Rated Voltage	300V
Rated Current	7A

Mechanical:

Torque	0.2Nm(1.7Lb-In.)
Operating Temp.	-40°C ~ 105°C
Striping length	5-6mm

Dimensions:

Wire range	24-18AWG
Pitch	3.5mm(.138”) 3.96mm(.156”)
Poles	2P,3P- 24P

Material:

Housing	PA66, UL94V-0
Screw	M2 Steel, Cr^{3+}Zn Plated
Contact	Brass Tin Plated
Cage	Phosphor Bronze

SG301

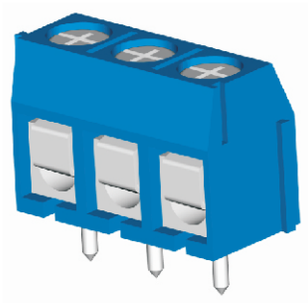

N=No. of poles
P=Pitch

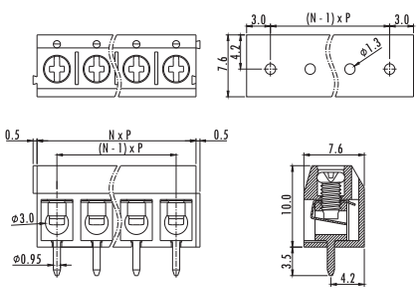

Unit: mm

SPECIFICATION

Electrical:

Rated Voltage	300V
Rated Current	15A

Mechanical:

Torque	0.2Nm(1.7Lb-In.)
Operating Temp.	-40°C ~ 105°C
Striping length	5-6mm

Dimensions:

Wire range	22-14AWG
Pitch	5.0mm(.197”) 5.08mm(.200”)
Poles	2P,3P - 24P

Material:

Housing	PA66, UL94V-0
Screw	M2.5 Steel, Cr^{3+}Zn Plated
Contact	Brass Tin Plated
Cage	Phosphor Bronze

SG301R

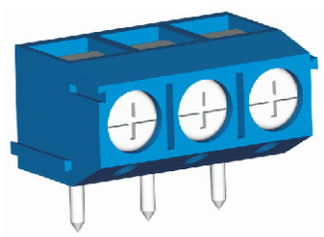

N=No. of poles
P=Pitch

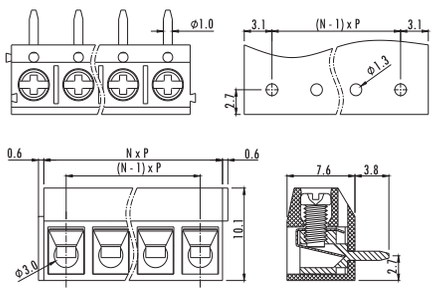

Unit: mm

SPECIFICATION

Electrical:

Rated Voltage	300V
Rated Current	15A

Mechanical:

Torque	0.2Nm(1.7Lb-In.)
Operating Temp.	-40°C ~ 105°C
Striping length	5-6mm

Dimensions:

Wire range	22-14AWG
Pitch	3.5mm(.197”) 5.08mm(.200”)
Poles	2P,3P - 24P

Material:

Housing	PA66, UL94V-0
Screw	M2.5 Steel, Cr^{3+}Zn Plated
Contact	Brass Tin Plated
Cage	Phosphor Bronze

Sugo Industrial Company Limited - Email sales@sugo.com.hk / Tel. (852) 2790 1280 Fax. (852) 2304 8488 / www.sugo.com.hk
Sugo International Pty. Limited - Email sales@sugo-au.com / Tel. (61) 02 8385 0076 / www.sugo-au.com

SUGO

PCB TERMINAL BLOCKS

SG300

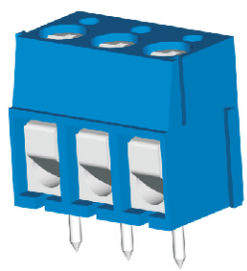

N=No. of poles
P=Pitch

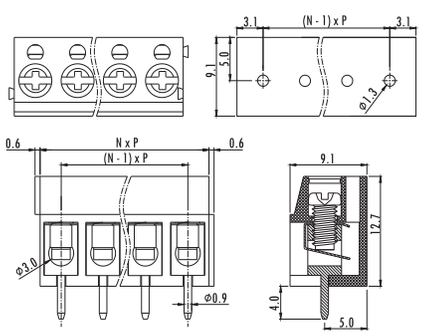

Unit: mm

SPECIFICATION

Electrical:

Rated Voltage	300V
Rated Current	10A

Mechanical:

Torque	0.5Nm(4.4Lb-In.)
Operating Temp.	-30°C ~ 120°C
Striping length	5-6mm

Dimensions:

Wire range	22-14AWG
Pitch	5.0mm(.197”) 5.08mm(.200”) 7.5mm(.295”)
Poles	2P,3P - 24P

Material:

Housing	PA66, UL94V-0
Screw	M3 Steel, Cr^{3+}Zn Plated
Contact	Brass Tin Plated
Cage	Phosphor Bronze

SG300R

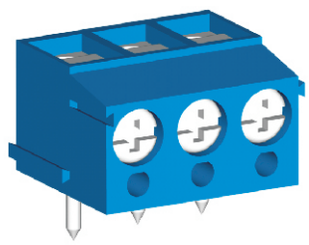

N=No. of poles
P=Pitch

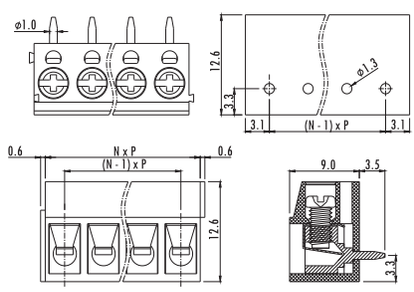

Unit: mm

SPECIFICATION

Electrical:

Rated Voltage	300V
Rated Current	10A

Mechanical:

Torque	0.5Nm(4.4Lb-In.)
Operating Temp.	-30°C ~ 120°C
Striping length	5-6mm

Dimensions:

Wire range	22-14AWG
Pitch	5.0mm(.197”) 5.08mm(.200”) 7.5mm(.295”)
Poles	2P,3P - 24P

Material:

Housing	PA66, UL94V-0
Screw	M3 Steel, Cr^{3+}Zn Plated
Contact	Brass Tin Plated
Cage	Phosphor Bronze

SG166

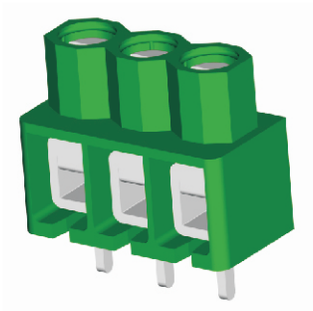

N=No. of poles
P=Pitch

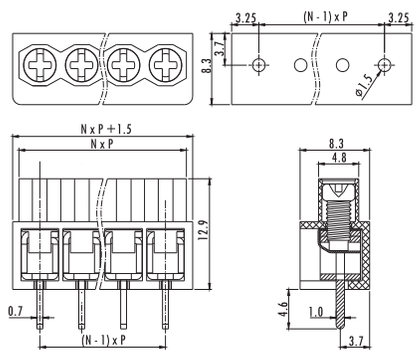

Unit: mm

SPECIFICATION

Electrical:

Rated Voltage	300V
Rated Current	15A

Mechanical:

Torque	0.5Nm(4.4Lb-In.)
Operating Temp.	-40°C ~ 105°C
Striping length	6-7mm

Dimensions:

Wire range	22-12AWG
Pitch	5.0mm(.197”)
Poles	2P,3P - 24P

Material:

Housing	PA66, UL94V-0
Screw	M3 Steel, Cr^{3+}Zn Plated
Contact	Brass Tin Plated
Cage	Phosphor Bronze

Sugo Industrial Company Limited - Email sales@sugo.com.hk / Tel. (852) 2790 1280 Fax. (852) 2304 8488 / www.sugo.com.hk
Sugo International Pty. Limited - Email sales@sugo-au.com / Tel. (61) 02 8385 0076 / www.sugo-au.com

PCB TERMINAL BLOCKS

SG167

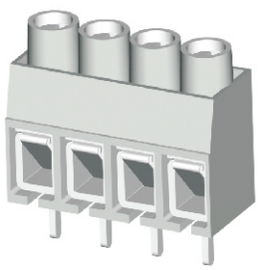

N=No. of poles
P=Pitch

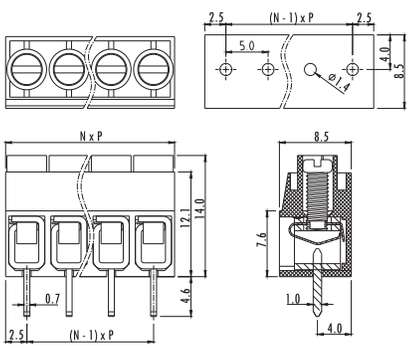

Unit: mm

SPECIFICATION

Electrical:

Rated Voltage	300V
Rated Current	15A

Mechanical:

Torque	0.4Nm(3.5Lb-In.)
Operating Temp.	-40°C ~ 105°C
Striping length	6-7mm

Dimensions:

Wire range	22-12AWG
Pitch	5.0mm(.197”) 7.62mm(.300”)
Poles	2P - 12P

Material:

Housing	PA66, UL94V-0
Screw	M2.5 Steel, Cr^{3+}Zn Plated
Contact	Brass Tin Plated
Cage	Phosphor Bronze

SG167R

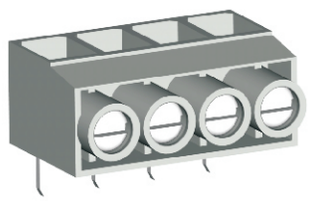

N=No. of poles
P=Pitch

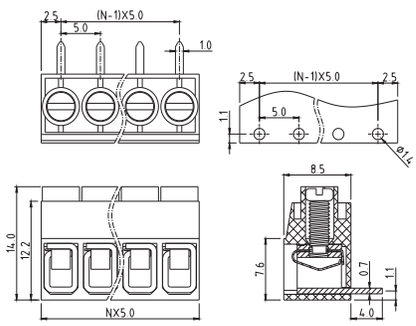

Unit: mm

SPECIFICATION

Electrical:

Rated Voltage	300V
Rated Current	15A

Mechanical:

Torque	0.4Nm(3.5Lb-In.)
Operating Temp.	-40°C ~ 105°C
Striping length	6-7mm

Dimensions:

Wire range	22-12AWG
Pitch	5.0mm(.197”) 7.62mm(.300”)
Poles	2P - 12P

Material:

Housing	PA66, UL94V-0
Screw	M2.5 Steel, Cr^{3+}Zn Plated
Contact	Brass Tin Plated
Cage	Phosphor Bronze

SG126

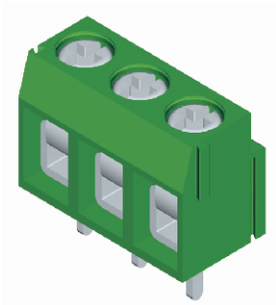

N=No. of poles
P=Pitch

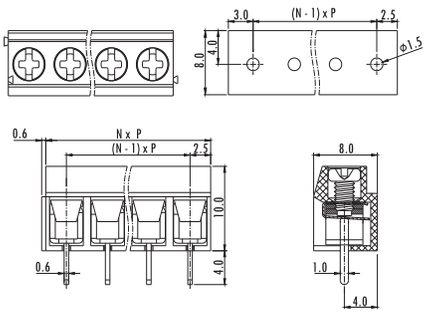

Unit: mm

SPECIFICATION

Electrical:

Rated Voltage	300V
Rated Current	10A

Mechanical:

Torque	0.4Nm(3.5Lb-In.)
Operating Temp.	-40°C ~ 105°C
Striping length	6-7mm

Dimensions:

Wire range	26-14AWG
Pitch	5.0mm(.197”)
Poles	2P,3P - 24P

Material:

Housing	PA66, UL94V-0
Screw	M2.5 Steel, Cr^{3+}Zn Plated
Contact	Brass Tin Plated
Cage	Phosphor Bronze

Sugo Industrial Company Limited - Email sales@sugo.com.hk / Tel. (852) 2790 1280 Fax. (852) 2304 8488 / www.sugo.com.hk
Sugo International Pty. Limited - Email sales@sugo-au.com / Tel. (61) 02 8385 0076 / www.sugo-au.com

SUGO

PCB TERMINAL BLOCKS

SG126R

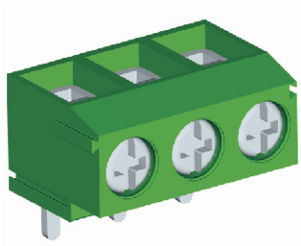

N=No. of poles
P=Pitch

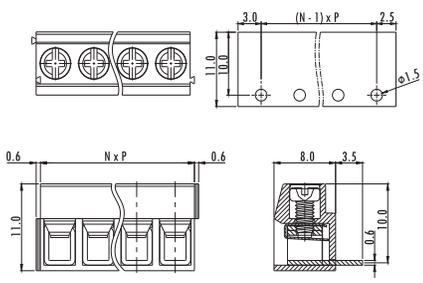

Unit: mm

SPECIFICATION

Electrical:

Rated Voltage	300V
Rated Current	10A

Mechanical:

Torque	0.4Nm(3.5Lb-In.)
Operating Temp.	-40°C ~ 105°C
Striping length	6-7mm

Dimensions:

Wire range	26-14AWG
Pitch	5.0mm(.197")
Poles	2P,3P- 24P

Material:

Housing	PA66, UL94V-0
Screw	M2.5 Steel, Cr^{3+}Zn Plated
Contact	Brass Tin Plated
Cage	Phosphor Bronze

For other SUGO products
Please visit

SUGO.COM.HK

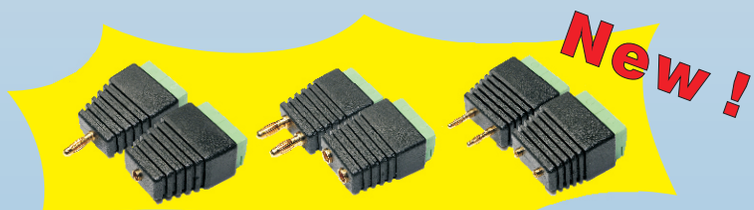

Terminal Adaptor

Sugo Industrial Company Limited - Email sales@sugo.com.hk / Tel. (852) 2790 1280 Fax. (852) 2304 8488 / www.sugo.com.hk
Sugo International Pty. Limited - Email sales@sugo-au.com / Tel. (61) 02 8385 0076 / www.sugo-au.com

SUGO

EUROSTYLE TERMINAL BLOCKS

SGPA8F

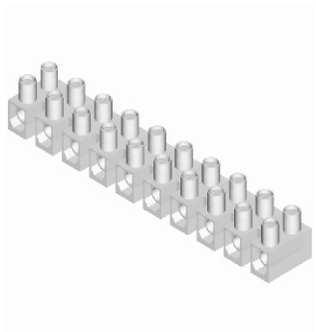

N=No. of poles
P=Pitch

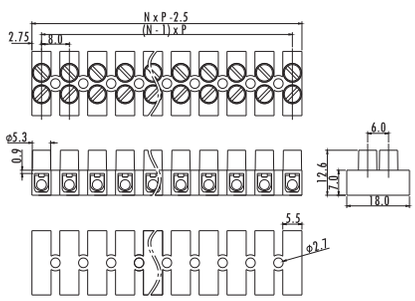

Unit: mm

SPECIFICATION

Electrical:

Rated Voltage	600V
Rated Current	20A

Mechanical:

Operating Temp.	-40°C ~ 110°C

Dimensions:

Wire range	12-22AWG
Pitch	8.2mm(.323")
Poles	2P - 12P

Material:

Housing	PA66, UL94V-2
Screw	M2.6 x 5 Steel Cr^{3+} Zn Plated
Contact	Copper strip Cr^{3+} Zn Plated

SGPA10F

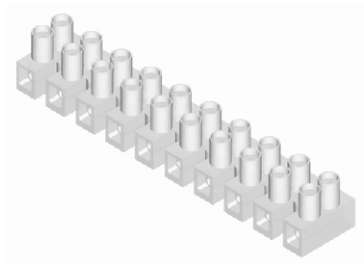

N=No. of poles
P=Pitch

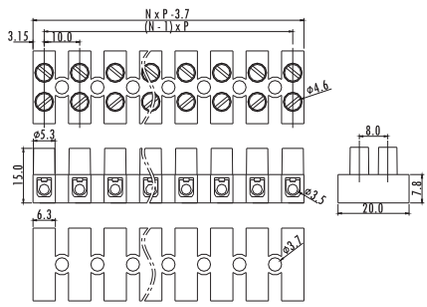

Unit: mm

SPECIFICATION

Electrical:

Rated Voltage	600V
Rated Current	30A

Mechanical:

Operating Temp.	-40°C ~ 110°C

Dimensions:

Wire range	10-22AWG
Pitch	10.0mm(.394")
Poles	2P - 12P

Material:

Housing	PA66, UL94V-2
Screw	M3 x 6 Steel Cr^{3+} Zn Plated
Contact	Copper strip Cr^{3+} Zn Plated

SGPA10H

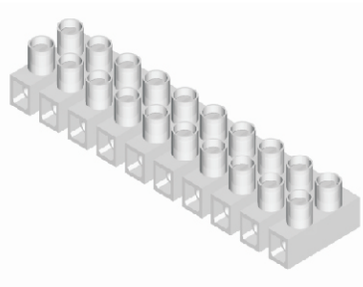

N=No. of poles
P=Pitch

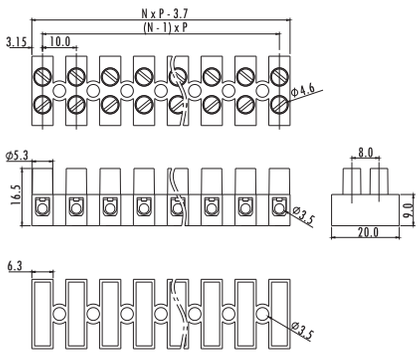

Unit: mm

SPECIFICATION

Electrical:

Rated Voltage	600V
Rated Current	30A

Mechanical:

Operating Temp.	-40°C ~ 110°C

Dimensions:

Wire range	10-22AWG
Pitch	10.0mm(.394")
Poles	2P - 12P

Material:

Housing	PA66, UL94V-2
Screw	M3 x 6 Steel Cr^{3+} Zn Plated
Contact	Copper strip Cr^{3+} Zn Plated

Sugo Industrial Company Limited - Email sales@sugo.com.hk / Tel. (852) 2790 1280 Fax. (852) 2304 8488 / www.sugo.com.hk
Sugo International Pty. Limited - Email sales@sugo-au.com / Tel. (61) 02 8385 0076 / www.sugo-au.com

SUGO

EUROSTYLE TERMINAL BLOCKS

SGPA12H

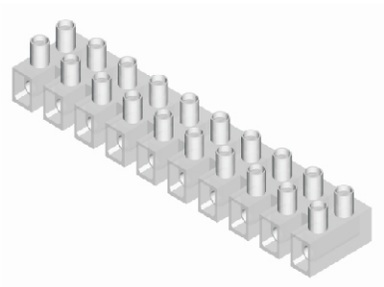

N=No. of poles
P=Pitch

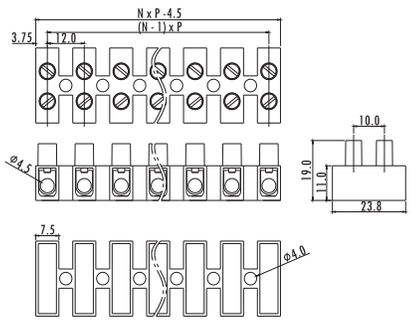

Unit: mm

SPECIFICATION

Electrical:

Rated Voltage	600V
Rated Current	35A

Mechanical:

Operating Temp.	-40°C ~ 110°C

Dimensions:

Wire range	10-22AWG
Pitch	12.0mm(.472")
Poles	2P - 12P

Material:

Housing	PA66, UL94V-2
Screw	M3.5 x 7 Steel Cr^{3+} Zn Plated
Contact	Copper strip Cr^{3+} Zn Plated

SG15H

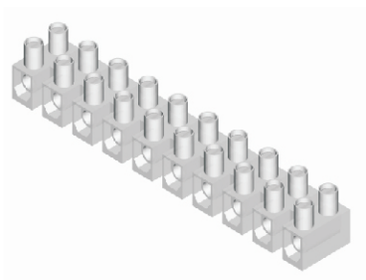

N=No. of poles
P=Pitch

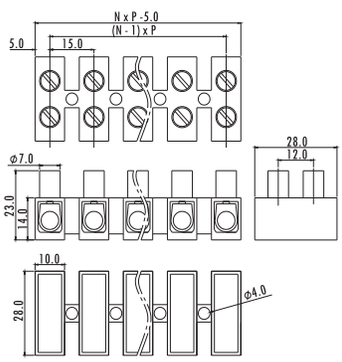

Unit: mm

SPECIFICATION

Electrical:

Rated Voltage	600V
Rated Current	50A

Mechanical:

Operating Temp.	-40°C ~ 110°C

Dimensions:

Wire range	12-8AWG
Pitch	15.0mm(.591")
Poles	2P - 12P

Material:

Housing	PA66, UL94V-2
Screw	M4 x 9 Steel Cr^{3+} Zn Plated
Contact	Copper strip Cr^{3+} Zn Plated

SG10HT-2.0

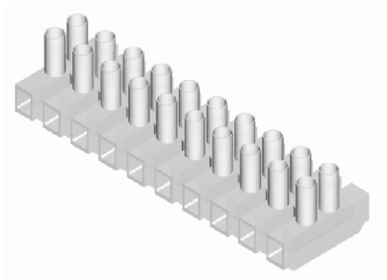

N=No. of poles
P=Pitch

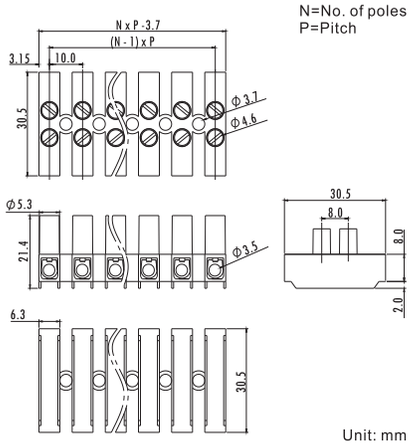

Unit: mm

SPECIFICATION

Electrical:

Rated Voltage	600V
Rated Current	30A

Mechanical:

Operating Temp.	-40°C ~ 110°C

Dimensions:

Wire range	10-22AWG
Pitch	10.0mm(.394")
Poles	2P - 12P

Material:

Housing	PA66, UL94V-2
Screw	M3 x 6 Steel Cr^{3+} Zn Plated
Contact	Copper strip Cr^{3+} Zn Plated

Sugo Industrial Company Limited - Email sales@sugo.com.hk / Tel. (852) 2790 1280 Fax. (852) 2304 8488 / www.sugo.com.hk
Sugo International Pty. Limited - Email sales@sugo-au.com / Tel. (61) 02 8385 0076 / www.sugo-au.com

SUGO

EUROSTYLE TERMINAL BLOCKS

SG10HT

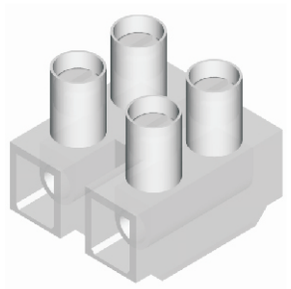

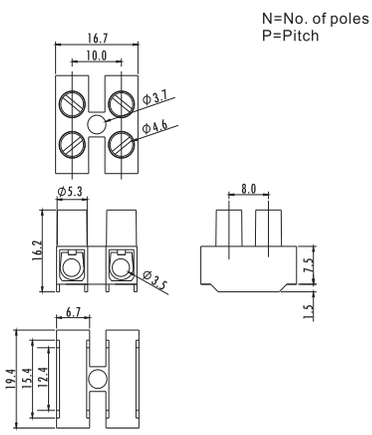

SPECIFICATION

Electrical:

Rated Voltage	600V
Rated Current	30A

Mechanical:

Operating Temp.	-40°C ~ 110°C

Dimensions:

Wire range	10-22AWG
Pitch	10.0mm(.394")
Poles	2P - 12P

Material:

Housing	PA66, UL94V-2
Screw	M3 x 6 Steel Cr^{3+}Zn Plated
Contact	Copper strip Cr^{3+}Zn Plated

SG4T

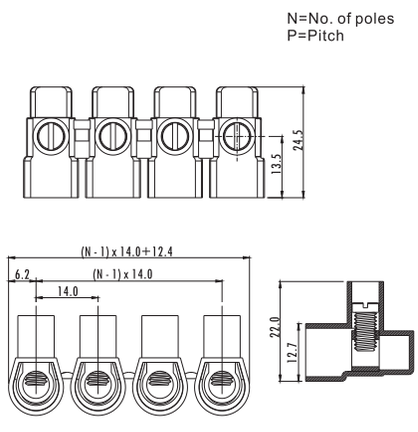

SPECIFICATION

Electrical:

Rated Voltage	300V
Rated Current	30A

Mechanical:

Operating Temp.	-30°C ~ 85°C

Dimensions:

Wire range	10-20AWG
Pitch	14.0mm(.394")
Poles	2P - 10P

Material:

Housing	PA66, UL94V-2
Screw	M4 Steel Cr^{3+}Zn Plated
Contact	Copper

SG6T

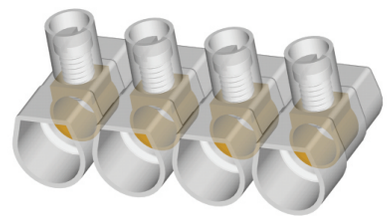

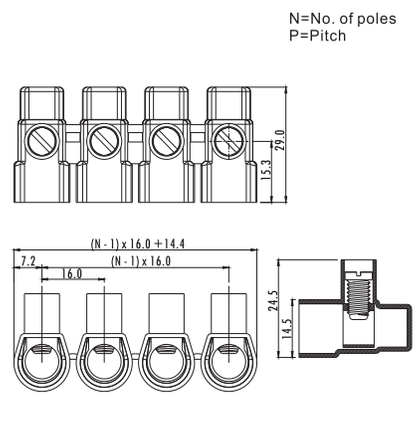

SPECIFICATION

Electrical:

Rated Voltage	300V
Rated Current	30A

Mechanical:

Operating Temp.	-30°C ~ 85°C

Dimensions:

Wire range	8-16AWG
Pitch	16.0mm(.394")
Poles	2P - 10P

Material:

Housing	PA66, UL94V-2
Screw	M3 Steel Cr^{3+}Zn Plated
Contact	Copper

Sugo Industrial Company Limited - Email sales@sugo.com.hk / Tel. (852) 2790 1280 Fax. (852) 2304 8488 / www.sugo.com.hk
Sugo International Pty. Limited - Email sales@sugo-au.com / Tel. (61) 02 8385 0076 / www.sugo-au.com

SUGO

BARRIER TERMINAL BLOCKS

SG25C-B

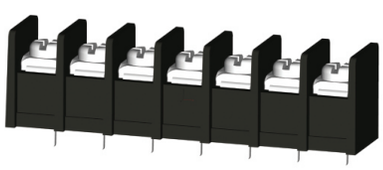

N=No. of poles
P=Pitch

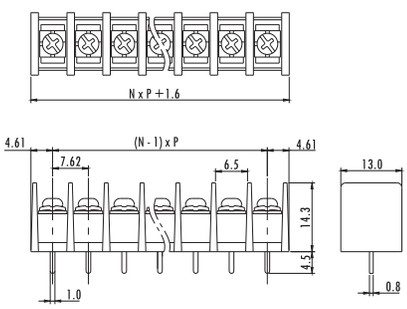

Unit: mm

SPECIFICATION

Electrical:

Rated Voltage	300V
Rated Current	15A

Mechanical:

Torque	0.5N.m 4.4Lb.in
Operating Temp.	-40°C ~ 105°C

Dimensions:

Wire range	14-22AWG
Pitch	7.62mm(.300")
Poles	2P - 26P

Material:

Housing	PA66, UL94V-0
Screw	M3 Steel Ni Plated
Contact	Brass Tin Plated

SG25S-B

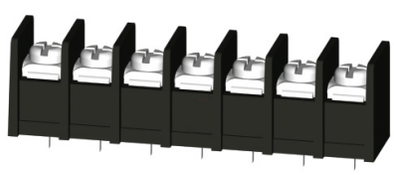

N=No. of poles
P=Pitch

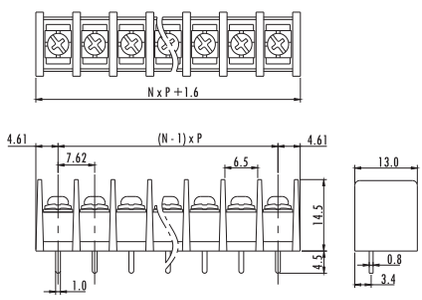

Unit: mm

SPECIFICATION

Electrical:

Rated Voltage	300V
Rated Current	15A

Mechanical:

Torque	0.5N.m 4.4Lb.in
Operating Temp.	-40°C ~ 105°C

Dimensions:

Wire range	14-22AWG
Pitch	7.62mm(.300")
Poles	2P - 26P

Material:

Housing	PA66, UL94V-0
Screw	M3 Steel Ni Plated
Contact	Brass Tin Plated

SG65C-B

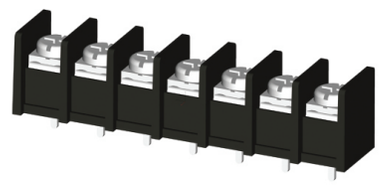

N=No. of poles
P=Pitch

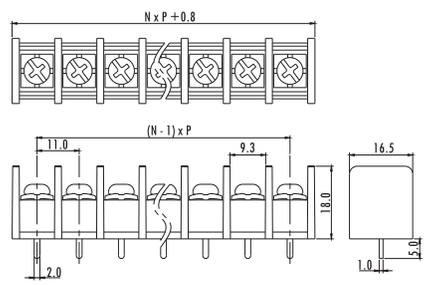

Unit: mm

SPECIFICATION

Electrical:

Rated Voltage	300V
Rated Current	20A

Mechanical:

Torque	1.2N.m 10.6Lb.in
Operating Temp.	-40°C ~ 105°C

Dimensions:

Wire range	12-22AWG
Pitch	11.0mm(.433")
Poles	2P - 22P

Material:

Housing	PA66, UL94V-0
Screw	M4 Steel Ni Plated
Contact	Brass Tin Plated

Sugo Industrial Company Limited - Email sales@sugo.com.hk / Tel. (852) 2790 1280 Fax. (852) 2304 8488 / www.sugo.com.hk
Sugo International Pty. Limited - Email sales@sugo-au.com / Tel. (61) 02 8385 0076 / www.sugo-au.com

BARRIER TERMINAL BLOCKS

SG45C-B

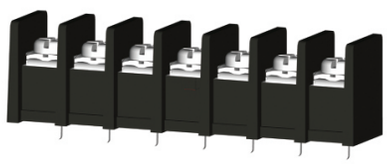

N=No. of poles
P=Pitch

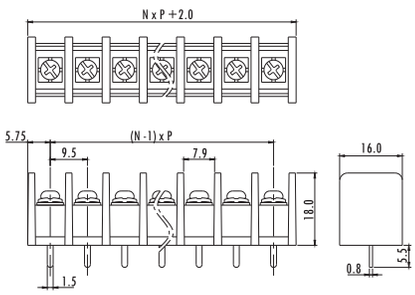

Unit: mm

SPECIFICATION

Electrical:

Rated Voltage	300V
Rated Current	25A

Mechanical:

Torque	1.2N.m 10.6Lb.in
Operating Temp.	-40°C ~ 105°C

Dimensions:

Wire range	12-22AWG
Pitch	9.5mm(.375")
Poles	2P - 22P

Material:

Housing	PA66, UL94V-0
Screw	M4 Steel Ni Plated
Contact	Brass Tin Plated

SG45R-B

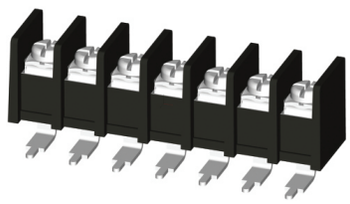

N=No. of poles
P=Pitch

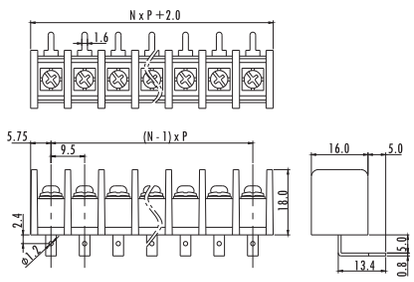

Unit: mm

SPECIFICATION

Electrical:

Rated Voltage	300V
Rated Current	25A

Mechanical:

Torque	1.2N.m 10.6Lb.in
Operating Temp.	-40°C ~ 105°C

Dimensions:

Wire range	12-22AWG
Pitch	9.5mm(.375")
Poles	2P - 22P

Material:

Housing	PA66, UL94V-0
Screw	M4 Steel Ni Plated
Contact	Brass Tin Plated

SG48C-B

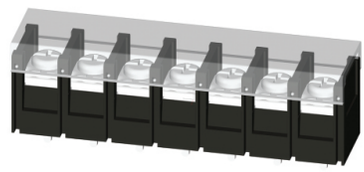

N=No. of poles
P=Pitch

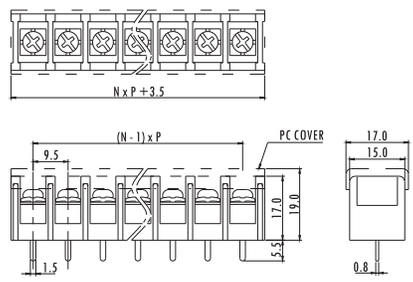

Unit: mm

SPECIFICATION

Electrical:

Rated Voltage	300V
Rated Current	20A

Mechanical:

Torque	1.2N.m 10.6Lb.in
Operating Temp.	-40°C ~ 105°C

Dimensions:

Wire range	12-22AWG
Pitch	9.5mm(.375")
Poles	2P - 22P

Material:

Housing	PA66, UL94V-0
Screw	M4 Steel Ni Plated
Contact	Brass Tin Plated

Sugo Industrial Company Limited - Email sales@sugo.com.hk / Tel. (852) 2790 1280 Fax. (852) 2304 8488 / www.sugo.com.hk
Sugo International Pty. Limited - Email sales@sugo-au.com / Tel. (61) 02 8385 0076 / www.sugo-au.com

Sugo Products
www.sugo.com.hk

HONG KONG OFFICE
SUGO INDUSTRIAL COMPANY LIMITED
UNIT K, FLOOR 22, No.55 KING YIP STREET,
KWUN TONG, KWLOON, HONG KONG SAR
TEL: +852 2790 1280
FAX: +852 2389 0688
E-MAIL:sales@sugo.com.hk
AUSTRALIA OFFICE
SUGO INTERNATIONAL PTY. LIMITED
KRA-MAR HOUSE, SUITE 102, 21-23 BELMORE ST.,
2134 BURWOOD, SYDNEY, NSW, AUSTRALIA
TEL: +61 02 8385 0076
E-MAIL:sales@sugo-au.com
CHINA MAINLAND FACTORY
SUYO PLASTIC AND ELECTRONIC MANUFACTORY
NO.6 GUANGKOU ROAD, SHANSHA VILLAGE,
HENGLI TOWN, DONGGUAN CITY, GUANGDONG, CHINA